DATASHEET

Dust cover for E13 series (USB-A 2.0, USB-A 3.0 , RJ45, HDMI)

Item No. 3394781

Overview

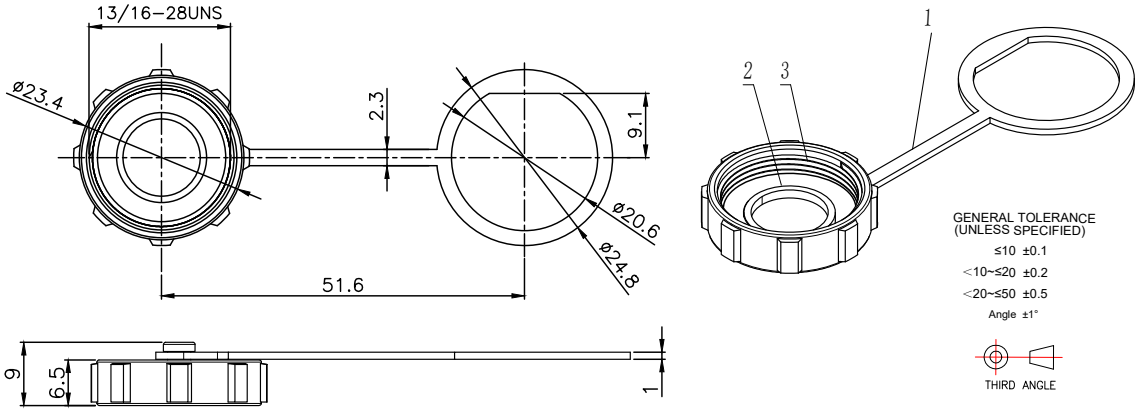

Technical data

Protection level IP67
Temperature range .....-25 to 80 °C
Material.....PP, PA66, Silica gel
Dimension (Ø x L) .....23.4 x 51.6 mm



This is a publication by Conrad Electronic SE, Klaus-Conrad-Str. 1, D-92240 Hirschau (www.conrad.com). All rights including translation reserved. Reproduction by any method, e.g. photocopy, microfilming, or the capture in electronic data processing systems require the prior written approval by the editor. Reprinting, also in part, is prohibited. This publication represents the technical status at the time of printing.

Copyright 2025 by Conrad Electronic SE.