Antec

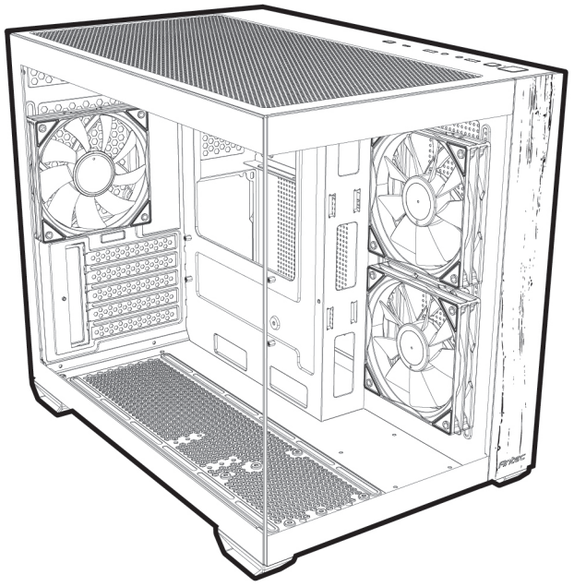

CX600M WOOD ARGB

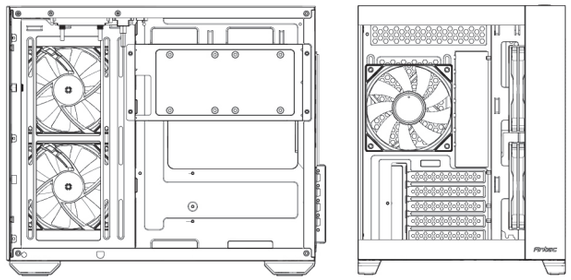

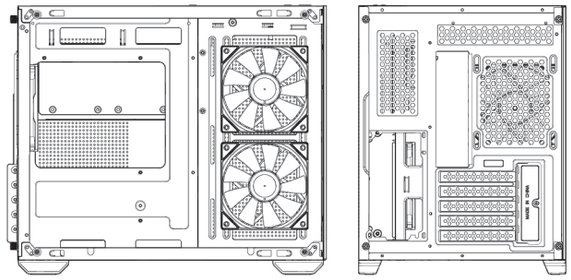

1 REMOVE SIDE PANEL

EXTRACCIÓN DEL PANEL LATERAL
SEITENWAND ENTFERNEN
RETIRER LE PANNEAU LATÉRAL
시이드 패널 분리
サイドパネルを取り外します
拆下側面板

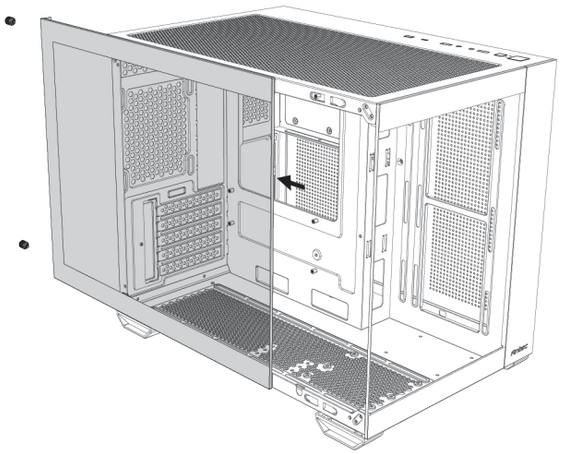

2 MOTHERBOARD INSTALLATION

INSTALACIÓN DE LA PLACA BASE
INSTALLATION DES MOTHERBOARDS
INSTALLATION DE LA CARTE MÈRE
메인보드 장착
マザーボードの設置
安装主板

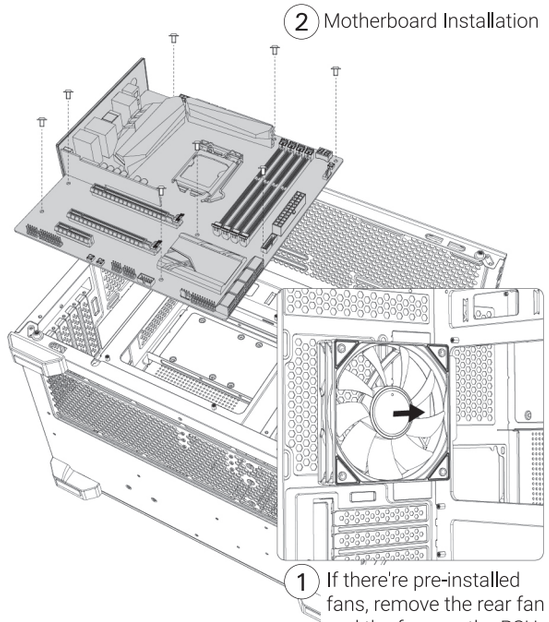

3 VGA/PCI-EXPRESS CARD INSTALLATION

INSTALACIÓN EXPRÉS DE LA TARJETA VGA/PCI
VGA / PCI-EXPRESS KARTENINSTALLATION
INSTALLATION DE LA CARTE VGA/PCI-EXPRESS
VGA/PCI-E 카드 장착
VGA/PCI-Eの設置
安装VGA/PCI-E卡

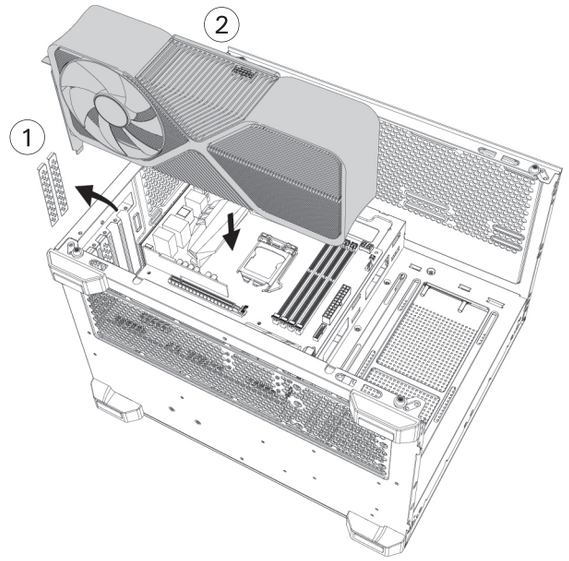

4 POWER SUPPLY INSTALLATION
INSTALACIÓN DE LA FUENTE DE ALIMENTACIÓN
INSTALLATION DES NETZTEILS
INSTALLATION DU BLOC D'ALIMENTATION
파워서프라이 장착
電源の設置
安装电源组件

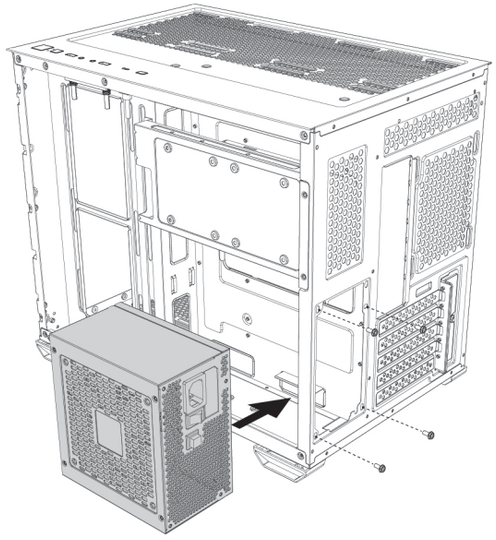

5 HARD DISK INSTALLATION
INSTALACIÓN DEL DISCO DURO
FESTPLATTENINSTALLATION
INSTALLATION DES DISQUES DURS
드라이브 장착
ドライブの設置
安装驱动器

A. INSTALLING A 3.5" HARD DISK DRIVE
INSTALAR UNA RANURA DE DISCO DURO DE 3.5"
INSTALLATION EINES 3.5 "FESTPLATTENLAUFWERKS
INSTALLER UN DISQUE DUR 3.5"
3.5" HDD장착
3.5"ドライブの設置
3.5寸硬盘安装

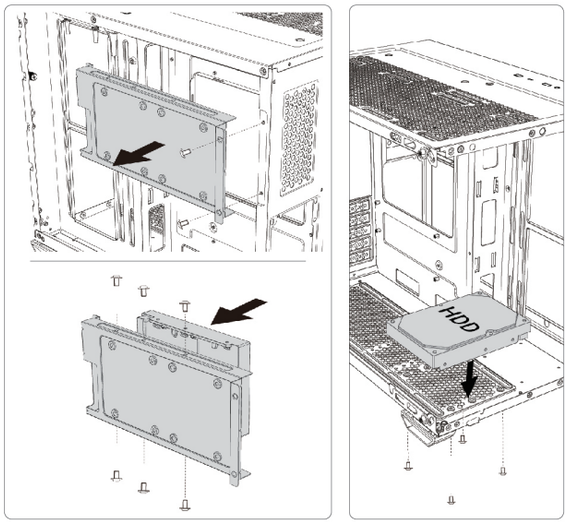

B. INSTALLING A 2.5" SOLID STATE DRIVE
INSTALAR UNA RANURA SOLID STATE DE 2.5"
INSTALLATION EINER 2.5 ZOLL SSD
INSTALLER UN DISQUE DUR 2.5"
2.5" SSD장착
2.5"ドライブの設置
2.5寸硬盘安装

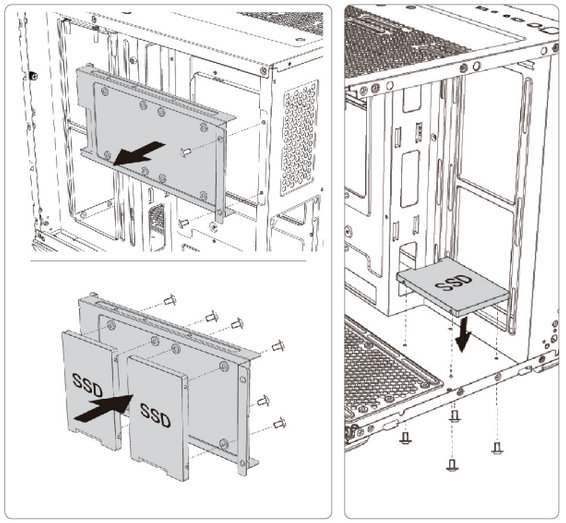

6 FAN INSTALLATION
INSTALAR VENTILADOR
LÜFTERINSTALLATION
INSTALLATION DU VENTILATEUR
팬 장착
ケースファンの設置
风扇安装

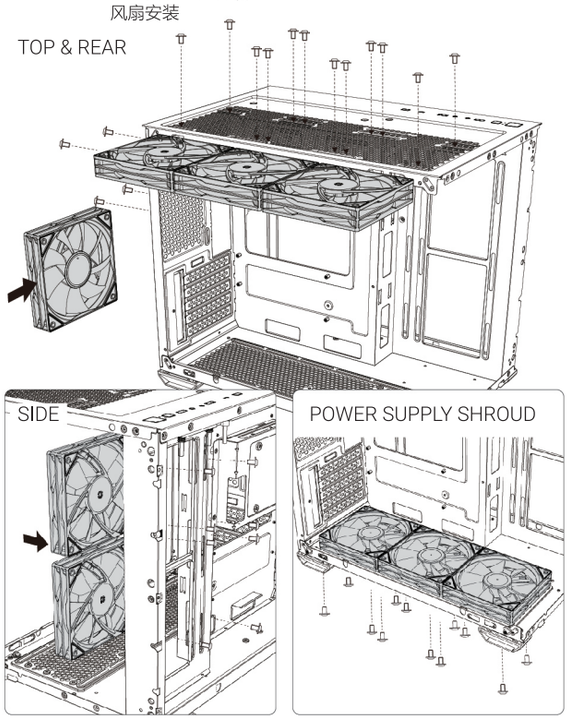

7 INSTALLING LIQUID COOLING RADIATOR
INSTALAR EL RADIADOR DE REFRIGERACIÓN LÍQUIDA
INSTALLATION EINES FLÜSSIGKEITSKÜHLERS
INSTALLATION D'UN KIT DE REFROIDISSEMENT LIQUIDE
수냉쿨러 장착
水冷の設置
水冷安装

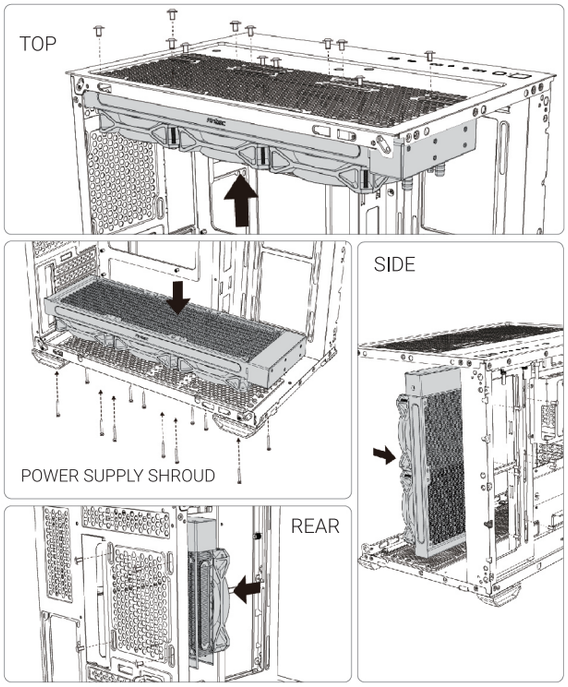

Antec®

www.Antec.com

All rights reserved. Specifications are subject to change without prior notice. Actual products and accessories may differ from illustrations. Omissions and printing errors excepted. Content of delivery might differ in different countries or areas. Some trademarks may be claimed as the property of others.

V2.2

©1986 – 2024 Antec, Inc. All rights reserved.