PRODUCT MANUAL

powerCON® TRUE1® | NAC3F-TRUE1-S NAC3F-TRUE1-L

1 APPLICATION & SAFETY INSTRUCTION

✓ **IP 65 & IP 67 RATED**

APPLICATION:

- The powerCON® TRUE1® system is certified as appliance couplers with breaking capacity according to IEC 60320-1, EN IEC 60320-1, UL 60320-1, CSA C22.2 No. 60320-1.
- It serves to supply power to an appliance and from an appliance to other equipment.
- To be installed by qualified person only.
- Appliance couplers acc. to IEC 60320-1 are suitable to be used in cord sets and interconnection cord sets acc. to IEC 60799

POWER IN

APPLIANCE INLET
NAC3MPX-TOP
NAC3MPX-WOT-TOP
NAC3MPX-TRUE1

CONNECTOR
NAC3F-TRUE1-S
NAC3F-TRUE1-L

POWER OUT

APPLIANCE OUTLET
NAC3FPX-TOP
NAC3FPX-WOT-TOP
NAC3FPX-ST-TOP
NAC3FPX-TRUE1

PLUG CONNECTOR
NAC3M-TRUE1-S
NAC3M-TRUE1-L

POWER IN / POWER OUT
▶ Combination

APPLIANCE INLET / APPLIANCE OUTLET
NAC3PX-TOP
NAC3PX-TRUE1

CONNECTOR
NAC3F-TRUE1-S
NAC3F-TRUE1-L

PLUG CONNECTOR
NAC3M-TRUE1-S
NAC3M-TRUE1-L

Products are in compliance with:	IEC 60320-1 EN IEC 60320-1 ✔	UL 60320-1 CSA C22.2 No. 60320-1 ✔
Ratings:	16A 250V AC	20A 250V AC
Conductor cross section:	1.5 - 2.5 mm²	14 - 12 AWG

CABLE LIST

Approved cables:	3 x 1.5 mm²	3 x 2.5 mm²
■ H07RN-F	-S	-L
■ H05VV-F	-S	-S

Approved cables:	14/3 AWG	12/3 AWG
■ SOOW	-L	-L
■ SJOOW	-S	-L

2 ASSEMBLY INFORMATION

Ⓐ

Place the bushing (1) and chuck (2) over the cable.

Important: Chuck and Bushing cannot be placed over the cable after the assembly of the insert.

(3) For easier assembly please use a cable lubricante.

Ⓑ

Prepare cable as shown.

IEC 60320-1
EN IEC 60320-1

UL 60320-1
CSA C22.2 No. 60320-1

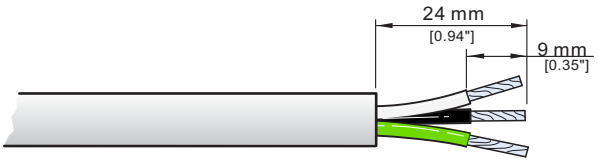

Ⓒ

IEC 60320-1
EN IEC 60320-1

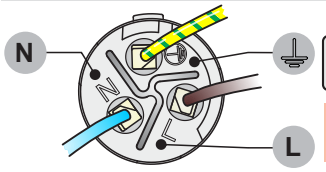

Torx size
T8

Torque Value 0.7 Nm
(6.2 inch pound / 0.52 lb.ft)

UL 60320-1
CSA C22.2 No. 60320-1

Slide the cable into the contacts and clamp with the screw with Torx size T8.

Typical Wiring	IEC 60320-1 EN IEC 60320-1	UL 60320-1 CSA C22.2 No. 60320-1
L ⇒	brown	black
N ⇒	blue	white
⏚ ⇒	green/yellow	green

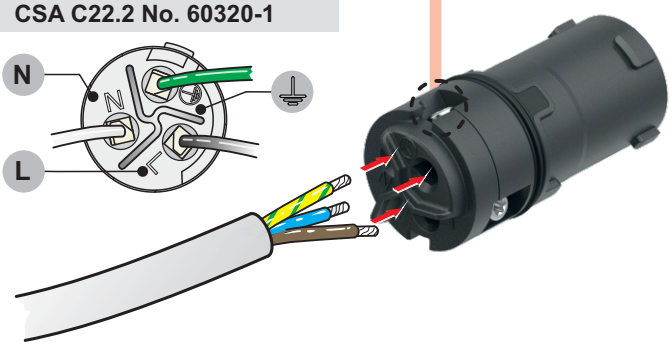

Ⓓ

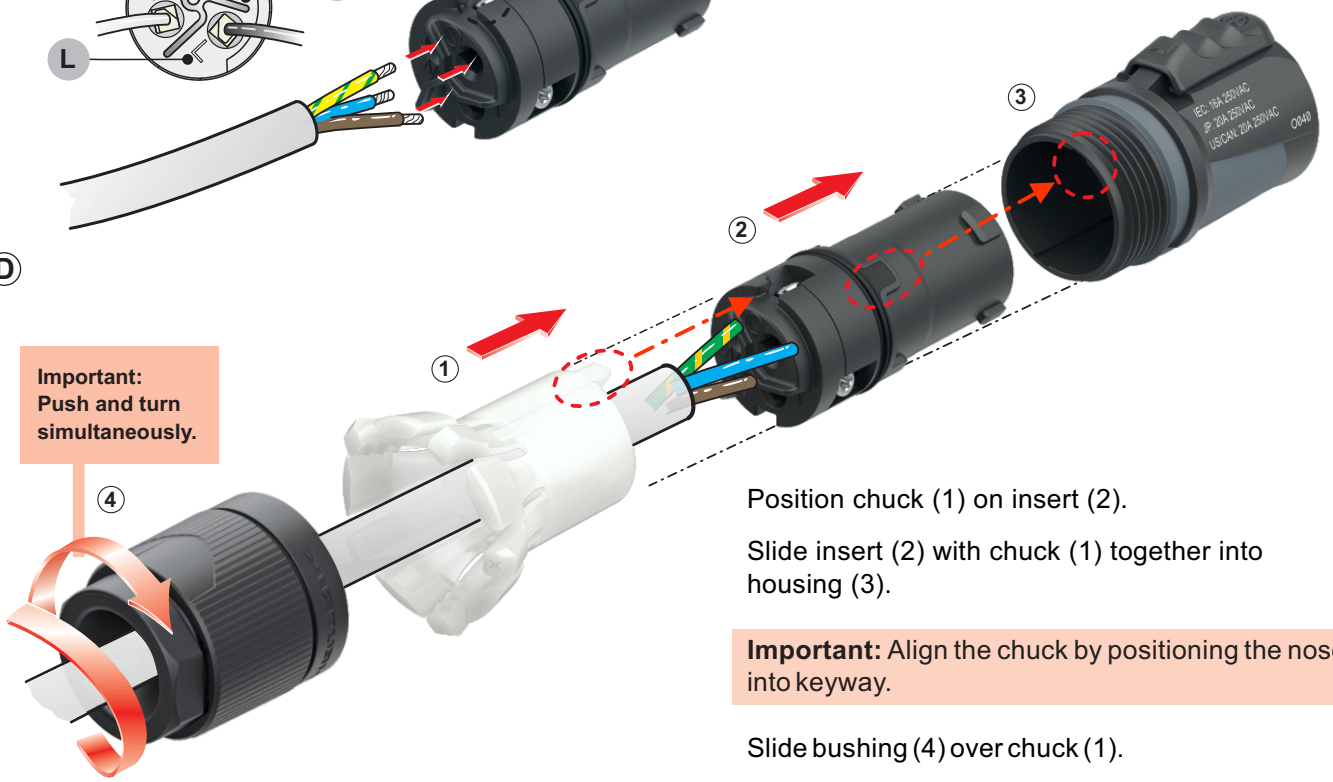

Important:
Push and turn simultaneously.

Position chuck (1) on insert (2).

Slide insert (2) with chuck (1) together into housing (3).

Important: Align the chuck by positioning the nose into keyway.

Slide bushing (4) over chuck (1).

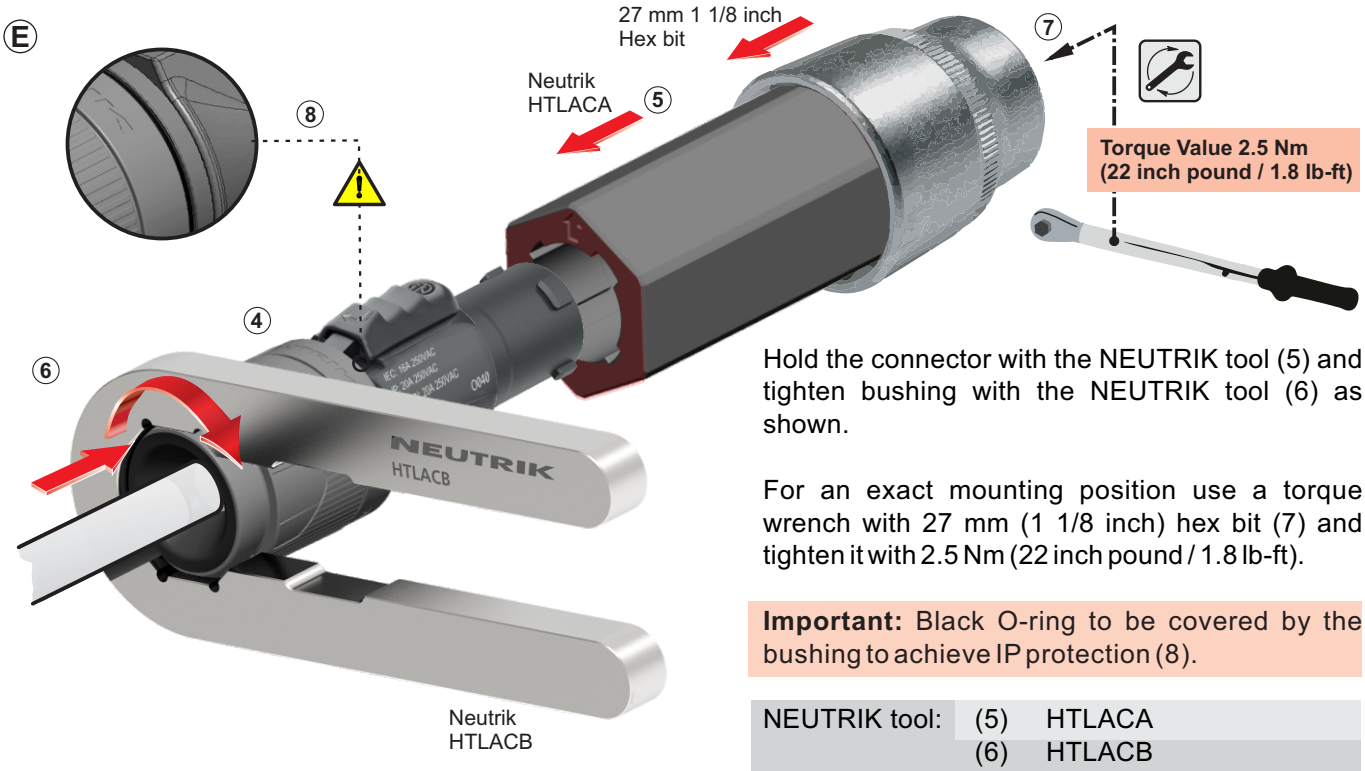

Hold the connector with the NEUTRIK tool (5) and tighten bushing with the NEUTRIK tool (6) as shown.

For an exact mounting position use a torque wrench with 27 mm (1 1/8 inch) hex bit (7) and tighten it with 2.5 Nm (22 inch pound / 1.8 lb-ft).

Important: Black O-ring to be covered by the bushing to achieve IP protection (8).

NEUTRIK tool:	(5)	HTLACA
	(6)	HTLACB

3 FOR DISASSEMBLY

1. Use the Neutrik tool HTLACB.
2. Position the tool on the surfaces and open the clamping sleeve.

HTLACB

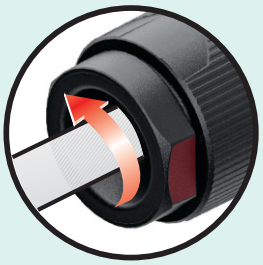

4 SAFETY INFORMATION

CAUTION

To ensure protection category, do not expose the connection to bending forces (e.g. do not attach loads to the cable, no free-dangling cable windings etc.).

SAFETY WARNING

For safety reasons the appliance couplers must be replaced in case of any broken parts or excessive wear and tear.

5 Application and Safety Instructions

A Assembly

- When assembling and processing the product, ensure the use of appropriate personal protective equipment.
- Neutrik components must only be assembled with designated and specified components.
- Replacement parts are suitable only when used in combination with the designated components. The product's characteristics are guaranteed only in the intended combination.

B Application

- The product is exclusively intended for installation in electronic equipment or similar devices.
- The product is not intended for use in medical applications.
- The product is not intended for use in potentially explosive or flammable environments.
- Appliance couplers are not intended for use as climbing aids. Caution: Electrical hazards!
- For indoor use only ⌂.
- Rated values are marked on the product and the smallest packaging unit.

C Operation

- The safety of this product was evaluated according to standard specifications under laboratory conditions
- After installation in an electronic device or similar, the product safety in the intended application must be ensured by the respective party involved.
- Before plugging in, check the contact area for dry surfaces.
- Product surfaces may cause burns at elevated ambient temperatures. Ensure the use of appropriate protective equipment.
- The customer is responsible for ensuring that the device is de-energized when plugged in with male contact.
- Neutrik Products are only allowed to use with compatible products from Neutrik Group brands.
- The product is unsuitable for use by vulnerable consumers.
- Connectors and plug connectors complying with this part of IEC 60320-1, EN IEC 60320-1, UL 60320-1, CSA C22.2 No. 60320-1 are suitable for normal use at ambient temperatures not normally exceeding +40 °C, but their average over a period of 24 h does not exceed +35 °C, with a lower limit of the ambient air temperature of –5 °C.

D Cleaning

- Clean only with dry and lint-free materials or compressed air.
- The product must not be cleaned while under load. The product may only be cleaned while it is not connected to any voltage and without the use of cleaning agents.

E Damages

- Handle products with care.
- In case of visible damages, check the suitability of the product for use.

6 Compatibility information

The products are suitable for use with the products listed below.
When used with other products, the suitability and safety must be assessed before commissioning and appropriate safety measures must be taken if necessary.

	NAC3FPX-TRUE1	NAC3MPX-TRUE1	NAC3PX-TRUE1
NAC3F-TRUE1-S **NAC3F-TRUE1-L**	Not applicable	Certified acc. to: UL 60320-1 EN IEC 60320-1	Certified acc. to: UL 60320-1 EN IEC 60320-1
NAC3M-TRUE1-S **NAC3M-TRUE1-L**	Certified acc. to: UL 60320-1 EN IEC 60320-1	Not applicable	Certified acc. to: UL 60320-1 EN IEC 60320-1
NAC3FX-W-TOP NAC3FX-W-TOP-L Certified in combination with NAC3MPX-TOP & NAC3PX-TOP	Not applicable	Tested acc. to: UL 60320-1 EN IEC 60320-1	Tested acc. to: UL 60320-1 EN IEC 60320-1
NAC3MX-W-TOP NAC3MX-W-TOP-L Certified in combination with NAC3FPX-TOP & NAC3PX-TOP	Tested acc. to: UL 60320-1 EN IEC 60320-1	Not applicable	Tested acc. to: UL 60320-1 EN IEC 60320-1

Information about the intended combinations and their IP protection class.

	NAC3M-TRUE1-S	NAC3M-TRUE1-L	NAC3F-TRUE1-S	NAC3F-TRUE1-L
NAC3FPX-TRUE1	IP65 / IP67	IP65 / IP67	Not applicable	Not applicable
NAC3MPX-TRUE1	Not applicable	Not applicable	IP65 / IP67	IP65 / IP67
NAC3PX-TRUE1	IP65 / IP67	IP65 / IP67	IP65 / IP67	IP65 / IP67
NAC3FPX-TOP	IP65	IP65	Not applicable	Not applicable
NAC3MPX-TOP	Not applicable	Not applicable	IP65	IP65
NAC3PX-TOP	IP65	IP65	IP65	IP65

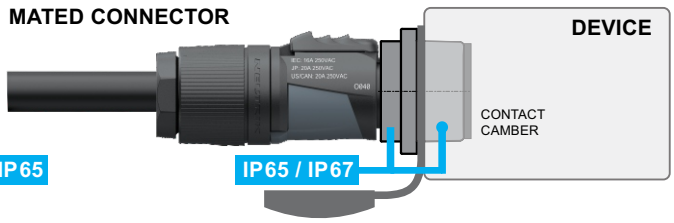

7 More Information on the website

https://www.neutrik.com/en/products/audio/powercon

Data subject to change without prior notice. © 2024 NEUTRIK®. NEUTRIK®, powerCON are registered trademark of Neutrik AG. ALL RIGHTS RESERVED.