N E W S

reflecta

reflecta Universal ceiling mount Prometheus 545-900 mm



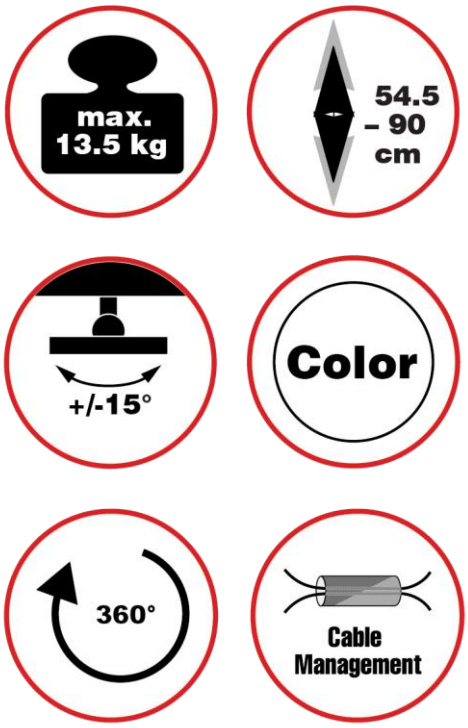

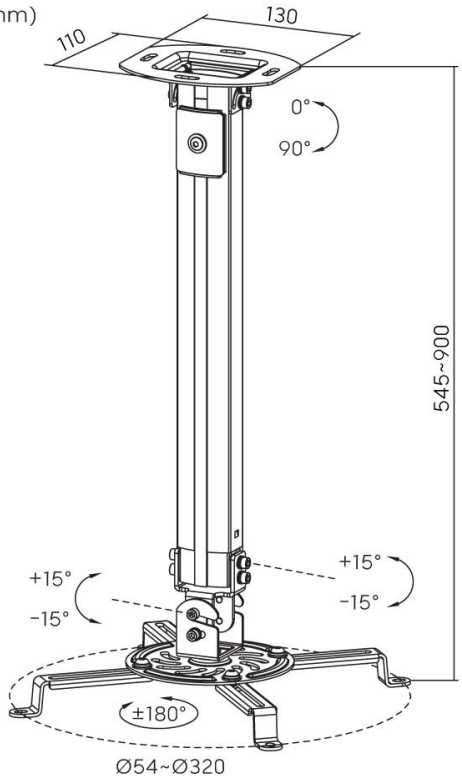



Product information:

- Universal ceiling mount for projectors
- Max. loading weight: 13.5 kg
- Height adjustable: 545-900 mm
- Tilt: +/-15°
- 360° Rotation
- Mounting range: 54-320 mm
- Cable management
- Also suitable for mounting on inclined ceiling
- Color: white
- Material: steel & aluminum (powder coated), plastic
- Dimensions: 334x334x900mm
- Content of delivery: mount, mounting material, manual

Code: 23043
EAN Code: 4005039230431

Specifications subject to change without prior notice



reflecta gmbh
Merkurstr. 8
D 72184 Eutingen
Phone: +49 (0) 7457 9465-60
Fax: +49 (0) 7457 9465-72
e-mail: mail@reflecta.de
http: www.reflecta.de