CAMOUFLAGE

Camouflage
EZ2 Plus
Instruction Manual



LINK TO ALL LANGUAGE MANUALS

Scan the QR code to download manuals in all languages available

Zeskanuj kod QR, aby pobrać instrukcje we wszystkich dostępnych językach.

Scan de QR-code om handleidingen in alle beschikbare talen te downloaden.

Scan QR-koden for at downloade manualer på alle tilgængelige sprog.

Scannez le code QR pour télécharger les manuels dans toutes les langues disponibles.

Naskenujte QR kód a stáhněte si manuály ve všech dostupných jazycích.

Scannen Sie den QR-Code, um Handbücher in allen verfügbaren Sprachen herunterzuladen.

Skanna QR-koden för att ladda ner manualer på alla tillgängliga språk.

Escanea el código QR para descargar los manuales en todos los idiomas disponibles

Scansiona il codice QR per scaricare i manuali in tutte le lingue disponibili

CAMOUFLAGE

TABLE OF CONTENTS

1. PACKAGE CONTENTS
2. PRODUCT DIAGRAM
3. QUICK START GUIDE
4. CAMERA OPERATION
5. ADVANCED SETTINGS
6. ALIGNING THE CAMERA
7. SETTING UP THE LIVE
8. NIGHT RECORDING
9. FILE FORMAT
10. CONNECTING TO COMPUTER
11. INSTALLATION
12. PRECAUTIONS FOR USE
13. FAQ
14. TECHNICAL SPECIFICATIONS

CAMOUFLAGE WEBSITE

Scan the QR code to go directly to our website, where you'll find a wide range of videos, guides, and product tutorials. Quickly and easily access all the information you need to make the most of your product!



PACKAGE CONTENTS

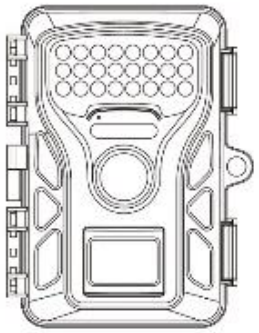

1



2



3

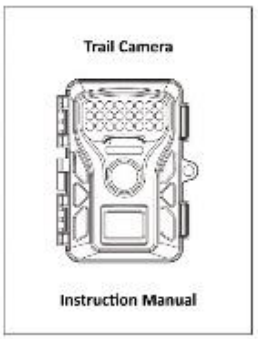

4

Carefully unpack the camera and check that all of the following components are contained in the box.

1. Wildlife Camera
2. USB Cable
3. Mounting belt
4. Instruction manual

Note:

- Remove the protective foil from the camera lens by pulling the protruding tab.
- Caution! Keep plastic foil and bags away from babies and small children, as otherwise danger of suffocation.

PRODUCT DIAGRAM

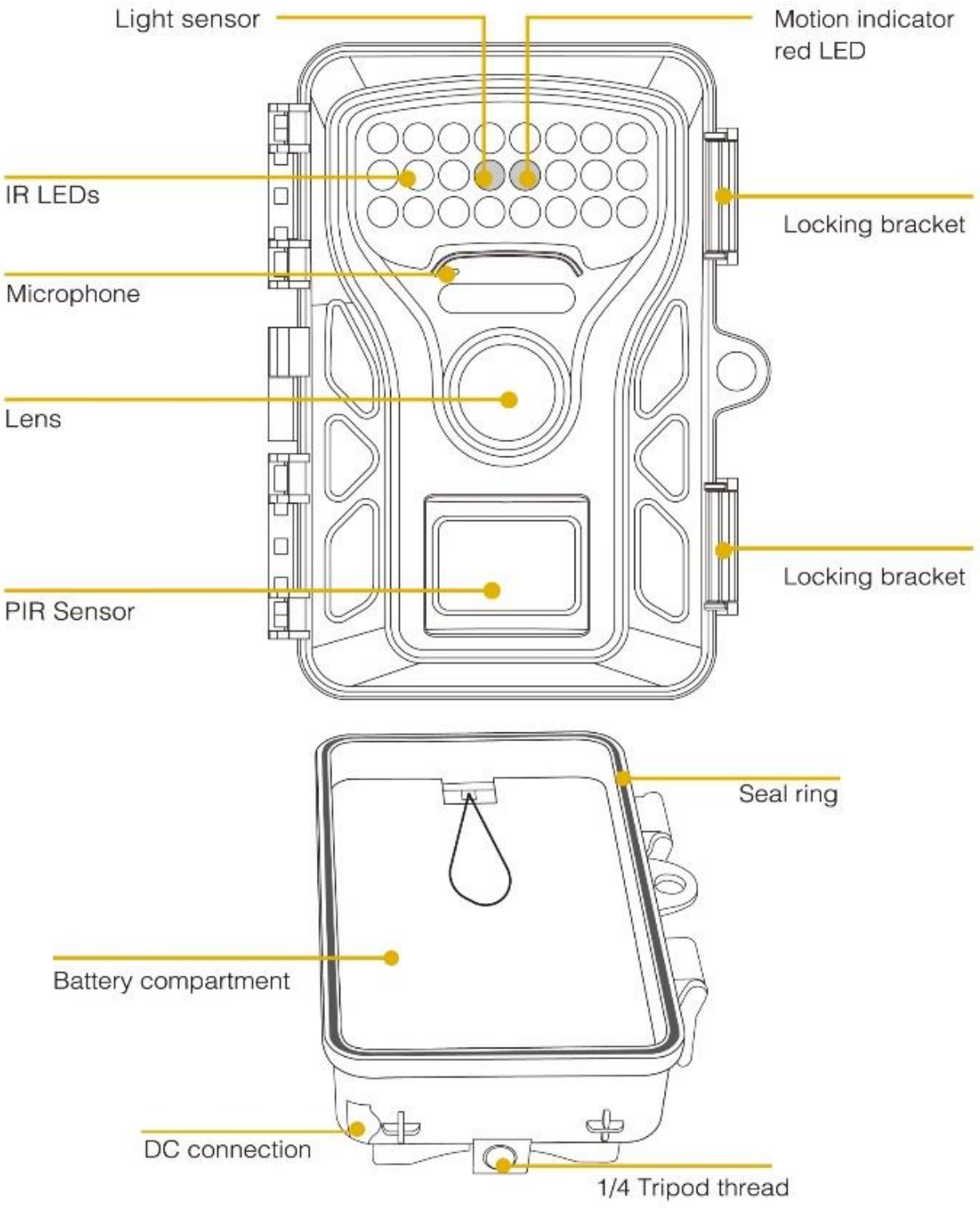

PRODUCT DIAGRAM

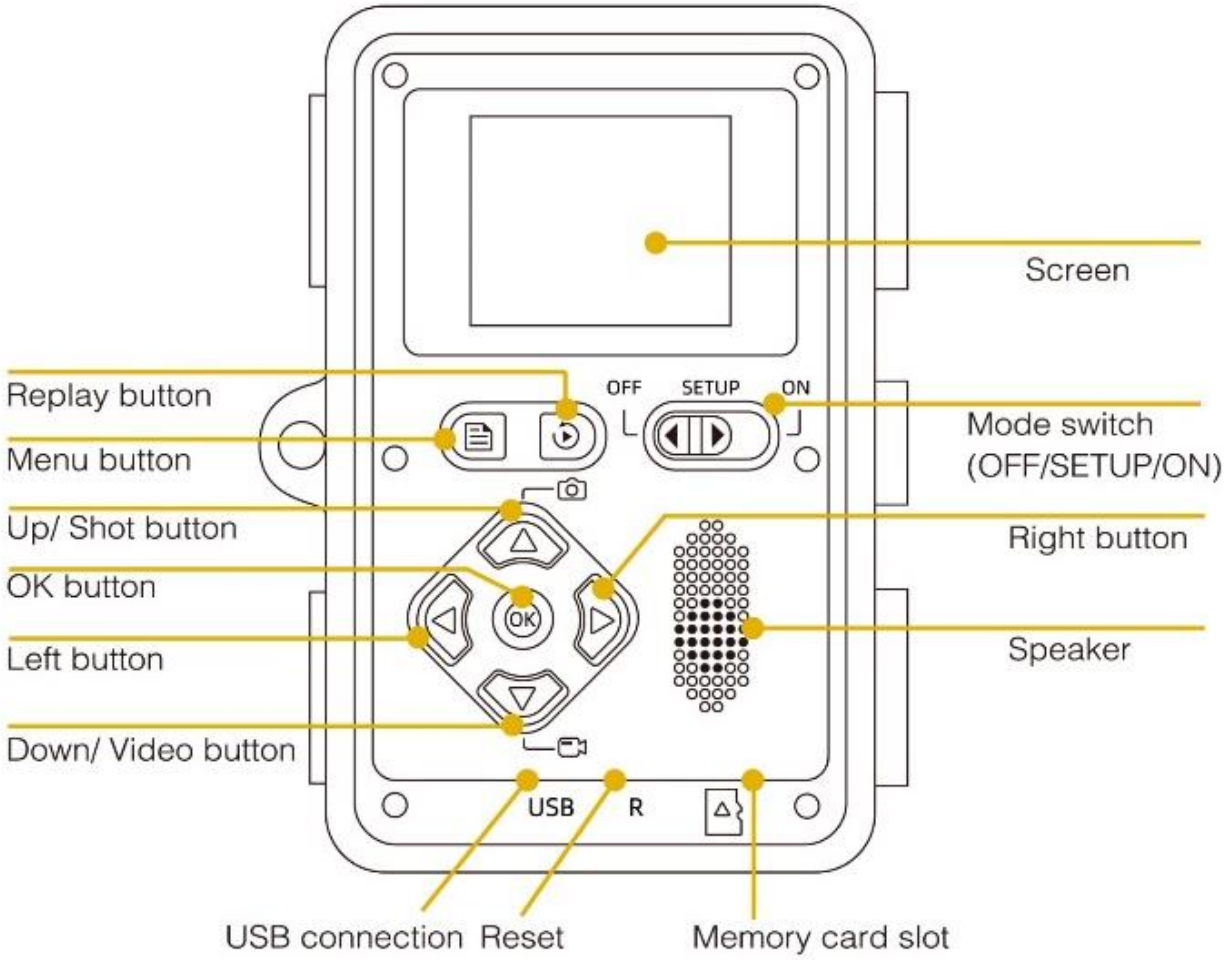

- The monitor is only switched on in the SETUP mode for changing menu settings or viewing existing photos.

- The TF memory card must have been inserted into the memory card slot in order to save photos.

- Using the mode switch the three operating modes OFF, SETUP and ON can be selected.

1. QUICK START GUIDE

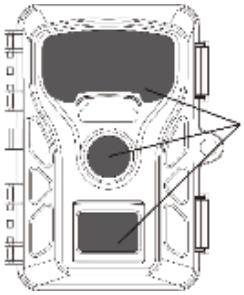

1. Remove the protective plastic covers from the camera lens and PIR sensor.

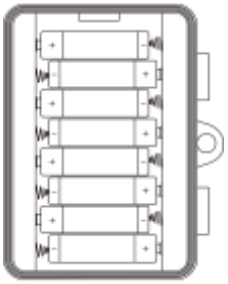

2. Open the battery cover to install 8 AA batteries (Energizer Lithium batteries are recommended. Alkaline batteries may be used but battery life will be shorter. Rechargeable batteries are not recommended.) Be sure to position the batteries for correct polarity (+/-) when installing.



3. Install a new SD card, up to 128GB. High-speed cards (class 10 or above) are recommended if you plan to record video clips. The new SD card is recommended to format with the camera before usage.



4. At the location where you will place the camera, move the power switch to the ON position. The camera's default settings were chosen for typical usage as a scouting camera for hunters. Photo mode at 8MP resolution, with a 30-second interval between photos, and "Medium" PIR sensitivity. These settings may be easily changed to suit your individual preferences or application (for example, if you would rather capture videos, or photos at a different resolution, spaced further apart), using the app on your smartphone or menu in the camera. (Moving the power switch to the "SETUP" position)

1. QUICK START GUIDE

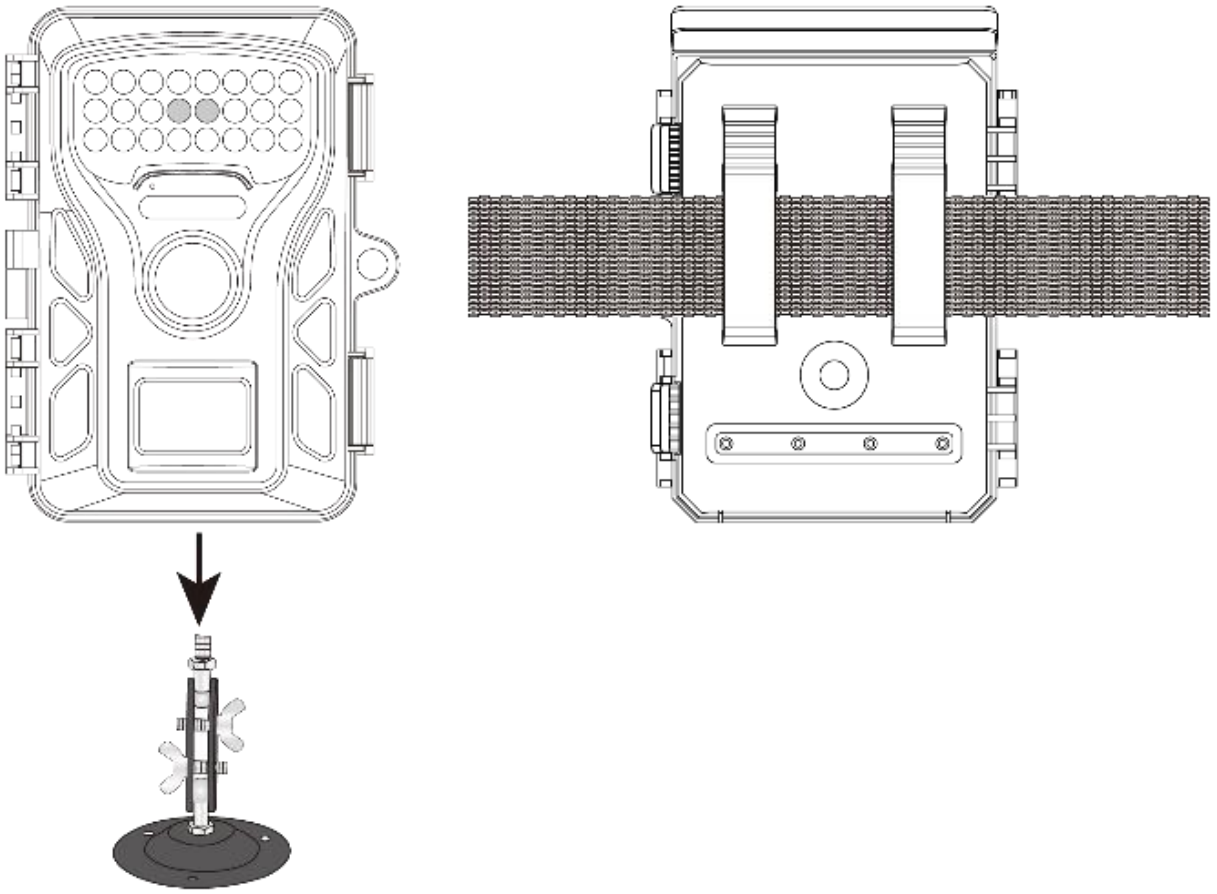

5. Mount the camera using the provided tree strap or 1/4”-20 mounting socket.

Now your camera is ready to use

2. CAMERA OPERATION

Before setting up the camera for surveillance, it must be set up for the respective purpose. For this purpose, there is a setup mode available.
In addition to changing settings, photos and videos can be taken and existing photos can be viewed in this mode.

Open the camera as described in section 6.1. The Mode switch is located at the bottom edge on the left inside. 3 operating modes can be selected:

Power/ Mode Switch	Functions
“OFF” Mode	1. The camera is completely switech off in the OFF mode.
“ON” Mode	1. The camera is activated to take photos automatically (Live mode).
“SETUP” Mode	1. Select SETUP mode to adjust settings and make or playback photos and videos.

3. ADVANCED SETTINGS

Prior to using the Wildlife Camera, change the settings as required. Slide the mode switch of the Camera to the SETUP position to start the setup mode. In the Photo or Video mode press the MENU button to call up the menu. All menu options for the Camera and possible setting values for the recording mode are listed below.



The standard setting is always highlighted in bold.

Parameter	Settings (Bold = default)	Description
Sequence	1 shot /2 shot /3 shot available	Default 1shot. Select the number of photos to be taken in succession when the camera is triggered in the Photo mode. Please also observe the parameter Interval!
Photo Quality	48M/30M/25M/20M/16M/12M **8M**/5M	Select the desired resolution for photos. A higher resolution produces a somewhat better photo quality but results in larger files requiring more space on the memory card.
Photo Burst	01, 02, 03, 04, 05	Select the number of photos taken in sequence per trigger.
Video resolution	**4K**/2K/1080FH/ 720P	Select the required video resolution. A higher resolution produces higher-quality videos but results in larger files, which require more space on the memory card. Videos are recorded in AVI format, which can be played back on most video devices.

3. ADVANCED SETTINGS

Video Length	10 seconds, Optional from 10s to 180s	When recording manually, the camera will automatically stop after 29 minutes of recording. When recording manually, the camera will stop when the size of one video clip reaches 4 GB. When recording manually, the camera will stop when the memory card is full or when the power is low. In live mode (ON)at night, the camera will automatically function according to the video length setting. For low power, it will stop recording. Please set the shorter video length in advance to ensure longer battery life. Notice: Video recording will consume significantly more power than taking photos, especially at night with IR LED on. Please set a shorter video length to ensure battery life. The power consumption of 10 second video recording is the same as 150 photos.
Audio Recording	**On** Off	Selecting On will record a video with sound.
Audio Volume	Low **Medium** High	Adjust video playback volume

3. ADVANCED SETTINGS

Capture, Video, Capture+ Video.		"Capture" is used for taking photos, while "Video" is used for recording videos. When you choose "Capture+ Video," the camera is capable of both capturing photos and recording videos. It follows a sequence where it captures a photo first and then proceeds to record a video.
Operate Interval		Defaulted 30seconds, optional from 5seconds ~30minutes The PIR Interval option lets you set the time between captured images when an animal remains within the camera's sensor range after it is first detected and the camera is triggered. The camera does not record any images or videos during the selected interval. This prevents the memory card from being filled with unnecessary shots. Note: The interval time is short, the camera shooting frequency would be high, and there would be high consumption of batteries. It would effect the usage days of the batteries. It is just on the opposite,the interval time is long, would be a lower consumption of batteries to guarantee a longtime usage.

3. ADVANCED SETTINGS

Time lapse	Off/On	When "on" has been selected, the camera would automatically take photos/videos in the selected time interval, irrespective of whether or not the PIR sensor has detected a motion or not. This is useful for observing cold blooded animals e.g. snakes or plants opening up, etc. As soon as the "On" setting has been confirmed by pressing the OK button you can enter the interval time after which photos/videos are to be taken. Note: In this mode, the PIR function would stop working, and the camera would take photos/videos in the setting interval time.
Timer	Off/On	Select "ON" to establish a monitoring period. After completing the setup, the camera operates exclusively during a specific timeframe each day. Outside this period, the camera remains in standby mode. For example, if the start time is set to 18:35 and the end time to 8:25, the camera will function from 6:35 pm of the current day until 8:25 am of the next day. Beyond this specified period, the camera will not be triggered and will not capture any photos or videos.

3. ADVANCED SETTINGS

Time Stamp	Off/On	Selects whether the user wants to have the Time and Date stamped on images. The default mode is ON.
Format	Cancel/OK	Deletes(erases) all files stored on a card to prepare it for reuse. Always format a card that has been previously used in other devices.
Default setting(Reset to factory)	Cancel/OK	Restores all settings to the factory defaults.
Screen Saver	Off/1 Minutes/3 Minutes	
Auto Power Off	Off/3 min/5min/10 min	The LCD monitor would automatically turn off after the setting time.

3. ADVANCED SETTINGS

Economy Mode	Off/On	If turned on, files taken at night under low battery conditions will be completely black images.
Beep Sound	On/Off	Deletes(erases) all files stored on a card to prepare it for reuse. Always format a card that has been previously used in other devices.
PIR Sensitivity	High/Medium/Low	When set to "High", the PIR sensitivity is at its maximum, and the detection range is farthest. • When set to "Medium", the PIR sensitivity is moderate, and the detection range is average. • When set to "Low", the PIR sensitivity is relatively low, and the detection range is shorter. Note: This mode setting will impact the PIR detection range and sensitivity; please adjust this setting carefully.
Loop Recording	Off/On	If you plan to deploy this product in the field for an extended period and the memory card capacity is limited, you can enable this function. When you select "On," the camera will overwrite previous files, allowing the memory card to continuously store new recordings.

3. ADVANCED SETTINGS

Replay mode	Press the PLAYBACK button to enter the playback interface. Then, press the menu button to delete the files. **Delete:** Select the "Delete" option to remove individual or all photos and videos from the memory card thus making storage room for new photos and videos. **Delete Current:** Using this option you can delete individual photos and videos. After selection the option by pressing the OK button, the photo and video to be deleted is shown. Confirm deletion by selecting "OK" and confirming the selection by pressing the OK button. To end the deletion process, select "Cancel" and confirm by pressing OK. **Delete All:** Select option "All" to delete all photos and videos on your memory card. To confirm deletion of all your photos and videos, select "OK" and press the OK button. Select "Cancel" to interrupt the deletion operation.

4. ALIGNING THE CAMERA

The Test mode is advantageous for determining the best possible detection angle and range of the movement sensor. For this purpose attach the camera at approx. 1-2 m height to a tree and align the camera with a desired direction. Move slowly from one side of the observed area to the other. Move parallel to the camera. Try out different angles and distances.

The red LED on the front of the camera indicates that you were detected by a central sensor zone.

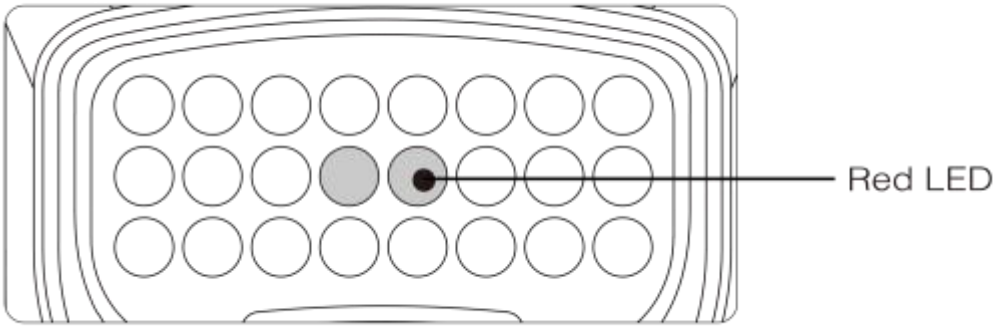

In this way, you can determine the best position for aligning the camera. The LED only lights up in the SETUP mode when one of the sensors detects movement. The LEDs do not light up when in Live mode.
We recommend not using the camera at sunny points to prevent incorrect signals and unnecessary photos and checking that no branches are in the sensor's active area. The optimum alignment is in the North or South direction. The detection range of the sensors is approximately 60°. Also, check that the camera is set to the correct height in line with the point to be observed. Where necessary, point the camera down for optimum alignment.

Note: Wildlife Camera corresponds to protection class IP 66. The camera is protected against dust and spray water and can thus be used in any weather condition.

5. SETTING UP THE LIVE MODE

The standard application of the Wildlife Camera is the Live mode. When in this mode, photos are either triggered by movement sensors or at intervals according to the respective setting. To set up the Live mode, switch mode switch to ON position.

The red status LED flashes for approx. 5 seconds after which the camera operates automatically and enters the Standby mode.
As soon as wild animals or other objects directly enter the detection area of the central sensor zone, the camera starts to record photos and videos.

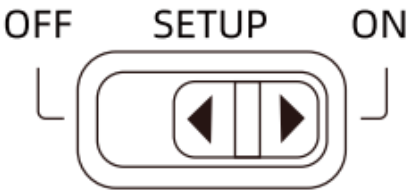

6. NIGHT RECORDING

During night recording the infrared LEDs (IR LEDs) at the front of the Wildlife Camera provide the light required for taking photos. Wildlife Camera uses IR LEDs with a long wavelength, to keep red light to a minimum. The provided number of IR LEDS generates a high deflection angle thus allowing night recording at a distance of 3 m to 20 m, without overexposing the object. Reflecting objects can, however, also cause overexposure within this range (e.g. road signs).

Please note that night recording using IR LEDs produces black-and-white images.

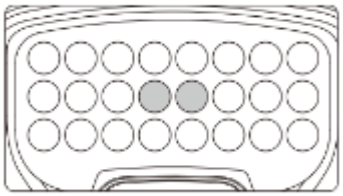

7. FILE FORMAT

The Wildlife Camera stores photos and videos on the memory card in the folder "DCIM MOVIE&PHOTO.

Photos are given a file name with the extension “JPG” (Example: “IMAG0001.jpg”), and videos, are given the extension “.avi” (Example: “IMAG0001.avi”).

When in SETUP and OFF mode use the enclosed USB cable to transfer files onto the computer. Alternatively, you can insert the memory card in a card reader on the computer.

The video file can be a played with most standard programs, such as Windows Media Player, QuickTime, etc.

8. CONNECTING TO COMPUTER

The Wildlife Camera can be connected to a computer using the supplied USB cables to view existing photos/videos.

System requirements

Windows	Macintosh
Pentium III or higher	PowerPC G3/G4/G5
Windows XP/Vista/7/8	OS 10.3.9 or newer system
512 MB RAM	512 MB RAM
1GB available hard disk space	1GB available hard disk space
Screen resolution 1.024 x 768 or higher	Screen resolution 1.024 x 768 or higher
Available USB connection	Available USB connection

1. Connect the camera to your computer using the USB cable.

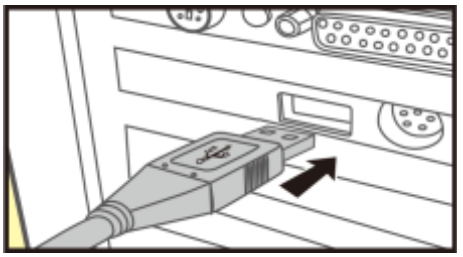

2. The camera switches on automatically In the USB mode, irrespective of the Selection on the mode switch.

3. The camera installs itself on the computer as an additional drive under the name "Removable storage device".

4. Double-click on the device to detect the folder "DCIM".

5. The photos and videos are located in the subfolders of the “DCIM” folder.

6. You can copy or move photo and video files on the computer. Alternatively, you can insert the memory card in a card reader on the computer.

Note: Mac computers show an "Unknown" drive on the desktop. When clicking on this drive, the program "iPhoto" is automatically started.

9. INSTALLATION

If you want to put the camera on the wall.

1. Mark the installation position with the help of the metal plate and make holes in the wall.



2. Put the white components in the holes.

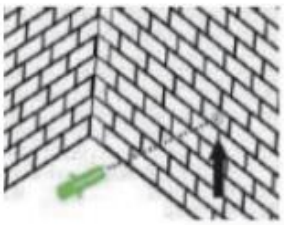

3. Fix the Fixation Kit by following the picture.

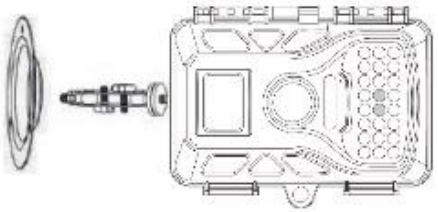

4. Put the camera in the position you have chosen and fix the camera with screws.

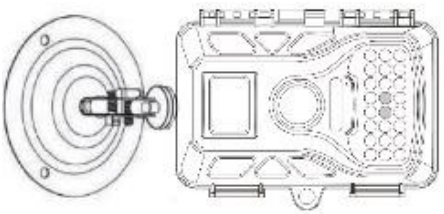

9. INSTALLATION

If you want to put the camera on a tree.

1. Pass the Installation Belt through the support on the back of the camera. If The belt is too long for the tree that you choose, there are 3 holes on each side of the support, you could pass the Installation Belt through several holes to shorten the belt.

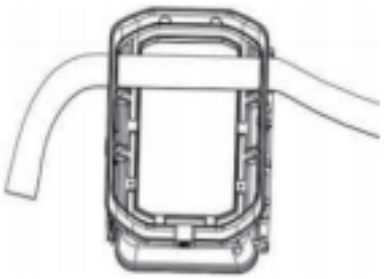

2. Put the camera on the bottom of the tree.

3. Go to the other side of the tree, and pass the belt through the buckles by following the picture

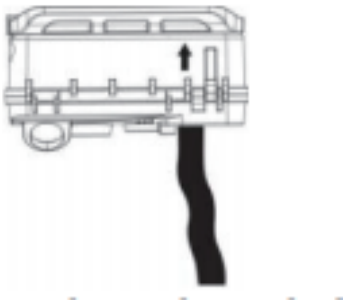

4. Adjust the position of the camera then tighten the belt.

5. If you are afraid that the camera will fall, you could also use the Fixation Kit and the Installation Belt together to make sure that the camera is sturdily fixed in the right position.

10. PRECAUTIONS FOR USE

- Microsoft® and Windows® are trademarks of Microsoft Corporation registered in the US.
- Pentium® is a registered trademark of Intel Corporation. Macintosh is a trademark of Apple Computer Inc.
- SDTM is a trademark.

Care:
Do not use any corrosive cleaners, such as methylated spirits, thinners, etc. to clean the camera housing and supplied accessory. When required, the clean system components with a soft dry cloth.

Storage:
Always remove the battery from the housing if the camera is not being used for some time and store the battery separately. On a day-to-day basis and over longer periods the batteries can be kept at a dry location out of the reach of children.

Disposal:
For disposal, separate packaging into different types and dispose of it in line with environmental regulations in supplied collection containers. Batteries and storage batteries may not be disposed of in domestic waste. Consumers are obliged by law to return used batteries to communal collection points or dealers selling batteries. Storage batteries and batteries do therefore contain the adjacent symbol.

Correct disposal of product:
The adjacent symbol indicates that electrical and electronic equipment may not be disposed of in domestic waste in the EU. Please use the returns and collection points of your local council or contact the dealer you purchased the product from. This prevents potentially harmful effects on the environment and health as a result of incorrect disposal. For further information contact the respective department of your local council.

11. FAQ

Q: The camera won't power up?

Make sure that you have installed all four batteries in the battery compartment, filling all four battery spaces with no "gaps". We recommend using Energizer Lithium AA batteries in our camera. Make sure that the batteries are installed correctly, observing proper polarity. Always place the negative (flat) end of each battery in contact with the spring side of its slot inside the camera. Press the "R" reset button at the bottom of the camera to restart the camera.

Q: Does the camera stop taking images or won't take images?

Please make sure that the SD card is not full. If the card is full, the camera will stop taking images. Check the batteries to make sure that they are new alkaline or lithium AA batteries. See previous notes about short battery life. Make sure that you are using a good-quality SD card in your camera. We recommend SanDisk SD Cards up to 32GB. If the SD card has its write protect switch in the lock position, the camera will not take images.

If you have used an SD card in another device before inserting it in our camera, you might want to try formatting the card by using our camera. In some cases, other devices may change the formatting of the SD card so that it will not work properly with our camera.

Press the "R" reset button at the bottom of the camera to restart the camera system in the condition that the SD card and battery are installed correctly.

Make sure that you have installed all four batteries in the battery compartment, filling all four battery spaces with no "gaps". We recommend using Energizer Lithium AA batteries in our camera.

Make sure that the batteries are installed correctly, observing proper polarity. Always place the negative (flat) end of each battery in contact with the spring side of its slot inside the camera.

Press the "R" reset button at the bottom of the camera to restart the camera.

11. FAQ

Q: Does the camera stop taking images or won't take images?

Please make sure that the SD card is not full. If the card is full, the camera will stop taking images.

Check the batteries to make sure that they are new alkaline or lithium AA batteries. See previous notes about short battery life.

Make sure that you are using a good-quality SD card in your camera. We recommend SanDisk SD Cards up to 32GB. If the SD card has its write protect switch in the lock position, the camera will not take images.

If you have used an SD card in another device before inserting it in our camera, you might want to try formatting the card by using our camera. In some cases, other devices may change the formatting of the SD card so that it will not work properly with our camera.

Press the "R" reset button at the bottom of the camera to restart the camera system in the condition that the SD card and battery are installed correctly.

Q: The camera takes continuous images of no subject.

A camera has what is known as a "false trigger" if the PIR sensor thinks that there is motion and heat in front of the camera lens when there is no subject in the image. These "False Triggers" are the result of placing the camera in an environment where there is motion associated with tree branches creating motion in front of the camera or an area where there is high heat in the foreground and any motion from wind could set off the camera.

Setting a camera up over water is also a potential cause for this issue. To remedy this situation:

Try moving the camera to an area that does not have any of these issues or try changing the sensor level on the menu settings.

If the camera continues to take images when there is no subject in them, try placing the camera in an inside environment and aiming at a location where there is no motion.

11. FAQ

If the camera continues to show issues, then there is probably an electronic component issue. If this is the case, please contact our customer service to send the camera back for repair.

Q: Battery life is shorter than expected?

The settings you select for "Operate interval" and "Video Length" in the Setup Menu will have a significant impact on battery life. Shorter interval time and long video length settings all lead to short battery life. We suggest going with the defaulted setting of Interval time 30SEC or above, and the video length within 10sec.

Battery life will vary with operating temperature and the number of images taken over time. Typically, the Camera will be able to capture several hundred images before the batteries die.

Check to make sure you have used new alkaline or lithium batteries. We recommend using Energizer Lithium AA batteries (full set of 4) in your camera to obtain maximum battery life.

Make sure that you are using a good quality name-brand SD card in your camera. We recommend SanDisk brand SD Cards up to 32GB. Our experience indicates that poor-quality SD cards can sometimes reduce your camera battery life.

Q: Still photo and/or video quality problems?

1. Night photos or videos appear too dark.

- Check the battery indicator icon to see if the battery power is full. The flash will stop operating near the end of the battery life.

- You will get the best results when the subject is within the ideal flash range, no farther than 15 meters from the camera. Subjects may appear too dark at greater distances.

11. FAQ

2. Daytime photos or videos appear too dark.

- Make sure that the camera is not aimed directly at the sun or other light sources during the day, as this may cause the camera's auto exposure to produce darker results.

3. Daytime photos or videos appear too bright.

- Make sure that the camera is not aimed near an extremely dark area during the day. The auto exposure may “overcompensate” by lightening the image too much.

4. Short video clips-not recording to the length set.

- Check to make sure that the SD card is not full.

- Make sure that the camera has good batteries in it. Near the end of the battery life, the camera may choose to record shorter video clips to conserve power.

Q: Photos do not capture the subject.

Check the “PIR SENSITIVITY” parameter setting (SETUP menu). For warm temperature conditions, set this to “HIGH” and for cold weather use, set the PIR sensitivity to “LOW”. For variable weather, use “MEDIUM”.

Try to set your camera up in an area where there is not a heat source in the camera’s line of sight.

In some cases, setting the camera near water will make the camera take images with no subject in them. Try aiming the camera over the ground.

Try to avoid setting the camera up on small trees that are prone to being moved by strong winds.

Remove any limbs which are right in front of the camera lens.

11. FAQ

Q: PIR sensor LED flashes/doesn't flash?

When the camera is in the "Setup" mode, a special LED on the front of the camera will flash when it senses motion. This is for setup purposes only and will help the user aim the camera.

During use, the LED will not visibly flash when the camera takes an image. The LED array uses infrared light to help keep the camera hidden from the game.

Q: The display screen comes on but then powers off.

The display automatically turns off if no control keys are pressed for 30 seconds, to conserve battery power.

12. TECHNICAL SPECIFICATIONS

CMOS sensor	1/3" 5MP
Lens	f=4.0mm F/NO=2.0 FOV=90°
Picture Resolution	44MP/30MP/25MP/20MP/16MP/12MP/8MP/5MP (default)/2MP
Video resolution	4K (3840 x 2160@30fps); 2K(2560 x 1440@30fps); 1080P(1920 x 1080 30fps); 720P(1280 x 720 30fps)
Video Format	JPEG /AVI (MJPG)
Display screen	2.0" IPS LCD color monitor
Trigger time	approx. 0.4 second
Detection Angle	60°
IR Flash range	65ft/20 meters
Functions	Multishot 1 to 3 images, interval 5 sec. To 60 min., video length 10 sec. to 3 min, interval recording, timer, password protection, image info stamp, low battery alarm
Memory	SD/SDHC memory card up to 128 GB

Note: Design and technical specifications are subject to change.

12. TECHNICAL SPECIFICATIONS

Connectors	USB type-c
IP glass	IP66 Waterproof
Trigger distance	20M
Operating temperature	-20 - 60°C
Storage temperature	-30 - 70°C
Operating Humidity	5% - 90%
Dimensions	approx. 135 x 103 x 77 mm
Weight	approx. 275 g
Connectors	USB type-c
IP glass	IP66 Waterproof
Operating temperature	-20 - 60°C
Storage temperature	-30 - 70°C

Note: Design and technical specifications are subject to change.

FC CE RoHS

DECLARATION
OF CONFORMITY