Read this document carefully before using this device. The guarantee will be expired by damaging of the device if you don't attend to the directions in the user manual. Also we don't accept any compensations for personal injury, material damage or capital disadvantages.

ENDA EPDA3 / EPAA3 Panel Mounted Three-phase Solid State Relays

Thank you for choosing ENDA EPDA3 / EPAA3 series Solid State Rela

* 25-40-50A AC three-phase load current.
* 460V AC load voltage.
* 8-30V AC/DC or 90-240V AC input voltage.
* Led status indicator for input voltage.
* Zero-cross switching.
* Applicable for three phase loads.
* Built-in varistor protection.
* Fan control thermostat (option).
* Panel mountable.
* CE marked according to European Norms.

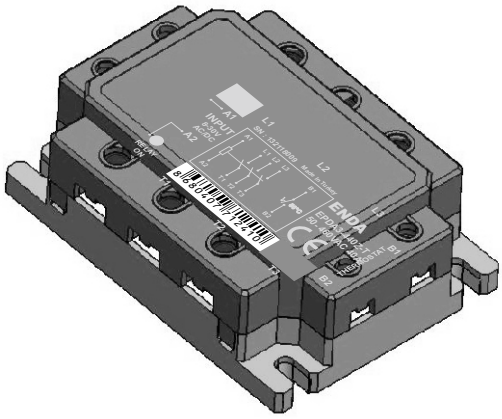

ORDER CODE

EP D A 3 - 4 25 Z - T

Product Basic Code	
Panel type SSR	EP

Input voltage	
8-30V AC/DC	D
90-240V AC	A

Load voltage	
AC	A

Pole number	
Three-pole	3

Option	
Thermostat	T

Switching	
Zero crossing	Z

Load current	
25A AC	25
40A AC	40
50A AC	50

Load voltage	
50-460V AC	4

CE RoHS Compliant

ENVIRONMENTAL CONDITIONS	
Ambient-storage temperature	-25... +60 °C / -30... +100 °C (Shouldn't be icing and condensation in ambient.)
Relative humidity	50% Relative humidity for +40°C temperature increases up to 90% at +20°C. (Shouldn't be condensation)
Pollution degree	2
Overvoltage category	II
Altitude	Max. 1000m
Protection	Ip20 According to EN60529

Do not use the device in locations subject to corrosive and flammable gases.

OUTPUT			
Order Code	EPxA3-425Z	EPxA3-440Z	EPxA3-450Z
Load current, AC51/25°C (Arms)	25	40	50
Load voltage (Vrms)	50 - 480		
Overload current t=1s/25°C (Arms)	85	150	200
Non rep.surge current/25°C (Arms)	240	400	500
On-state voltage drop (Vrms)	1,6		
Leakage current (mArms)	5		10
I^2t for fusing t=10ms (A^2s)	200	800	600
Frequency (Hz)	50 - 60		
Min. operating current (mArms)	160		200

THERMAL SPECIFICATIONS			
T_j Junction temperature (°C)	≤125	≤125	≤125
Rth(j-c) Junction-case thermal resistance (°C/W)	≤1,2	≤1,0	≤0,6
Rth(j-a) Junction-ambient thermal resistance (°C/W)	≤20	≤20	≤20

INPUT		
Order code	EPDA3-4xxZ	EPAA3-4xxZ
Input voltage	8 - 30Vac/dc	90 - 240Vac
Pick-up voltage	> 6Vac/dc	> 75Vac
Drop-out voltage	< 2Vac/dc	< 6Vac
Input current	< 17mAac/10mAdc	< 8mAac
Turn-on time	Maximum ½ Period	Maximum 1 Period
Turn-off time	Maximum ½ Period	Maximum 2 Period
LED indicator	If the input voltage >6V ac/dc, LED lights up.	If the input voltage >75V ac, LED lights up.

GENERAL	
Order code	EPxA3-4xxZ
Dimensions	W103xH74xD37mm
Weight	For EPxA3-425/440Z 200g , For EPxA3-450Z 220g (After packaging)
Isolation voltage	2500Vrms between I/O terminals for 1 min.
Connection	For power line 16mm² (with cable terminal 25mm²) cable, for signal line 4mm² cable can be connected.
Terminal screw torque	For power line max. 2,2Nm, for signal line max. 1,2Nm.
Product standard	EN 60947-4-3
Mounting	With M5 screws is mounted to the panel.
Enclosure material	Self extinguishing plastics (According to EN 60695-11-10 V-O)
	The temperature is above 50°C,the SSR works. (24Vdc 2A, 120Vac 2A)

While cleaning the device, solvents (thinner, benzine, acid etc.) or corrosive materials must not be used.

Up to date: 03092022, modification reserved and can be change any time previous notice !

DIMENSIONS

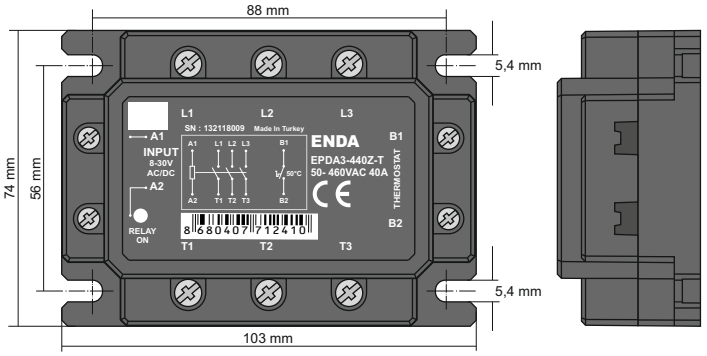

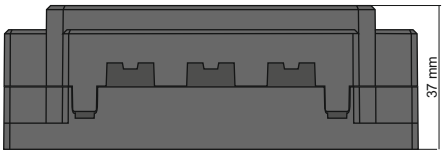

CONNECTION DIAGRAM

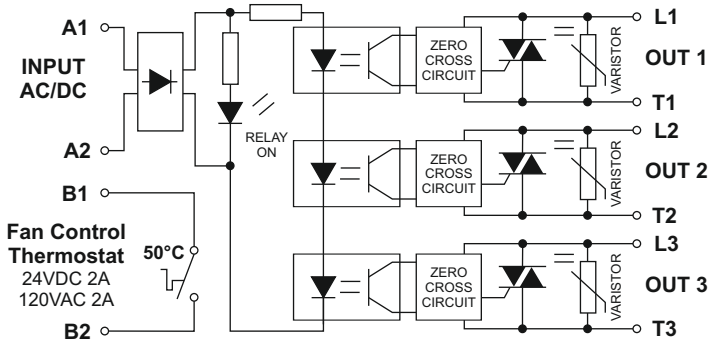

CONNECTION EXAMPLES

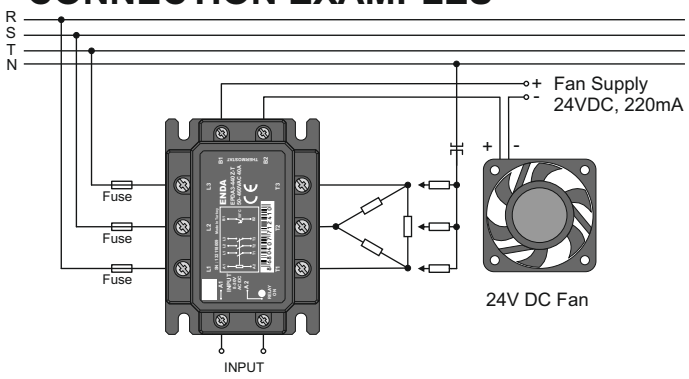

ENDA ETS-99-100F
RAIL AND PANEL MOUNTED HEAT SINK

EPxA3-425Z

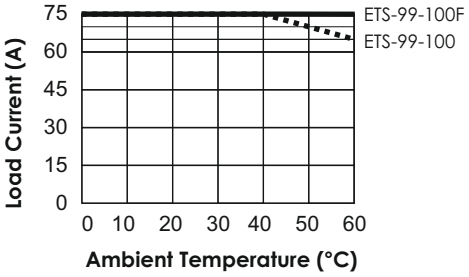

EPxA3-440Z

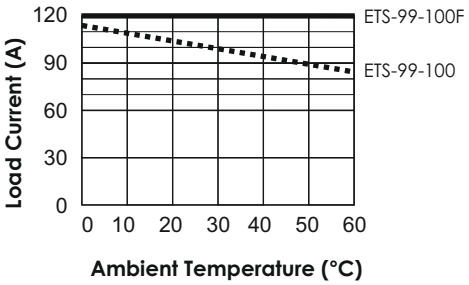

EPxA3-450Z

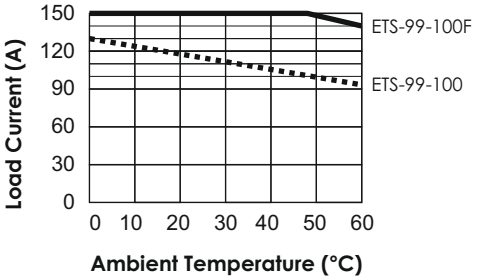

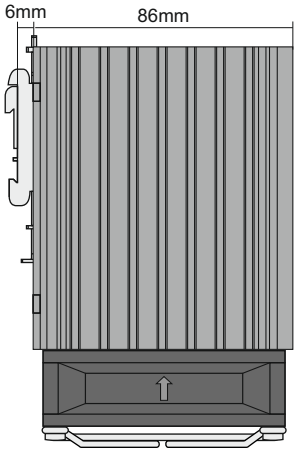

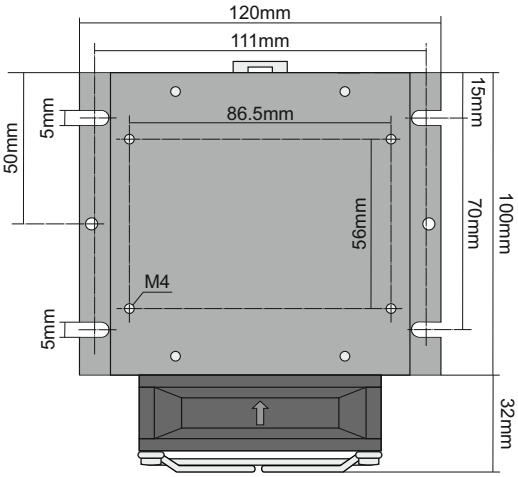

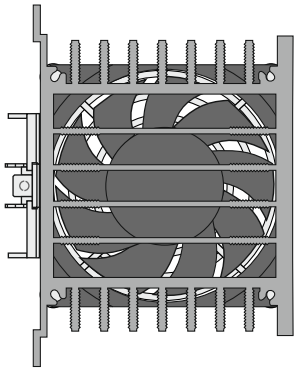

Heat Sink Order Code	SSR Current (A)	Dimensions WxHxD (mm)	Thermal Resistance (°C/W)
ETS-99-100	3x25	99x87x100	0,75
ETS-99-100F	3x40-3x50	99x87x125	0,34

INSTALLATION

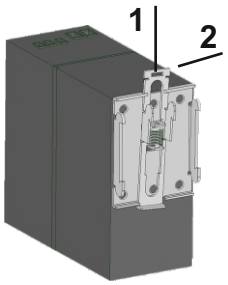

To mount the device on rail :
By using a screwdriver, pull the lockplate in direction **1** to lock it.
Assemble the device on the rail and push it in the direction **2** (sideways).

To remove the device from the rail :
By using a screwdriver, pull the lockplate in direction **1** to lock it.
Remove device from rail

SURAN Industrieelektronik
An der Hanfrötze 6 / D-77731 Willstätt
Tel.: +49 (0)7852 / 4889 962
E-mail : info@suran-elektronik.de
Internet : www.suran-elektronik.de