

100DM66E

100” 4K UHD DIGITAL SIGNAGE DISPLAY

Hisense Commercial Display solutions are perfect for high volume retail and corporate installation.The display delivers 500 nits brightness for enhanced visibility in brightly-lit environments. This higher brightness helps Hisense Commercial Displays provide better colour accuracy and vibrancy, meaning colours appear more lifelike and true to their intended experience, creating a more immersive viewing experience. Hisense M Series display are engineered for 24/7 operation, making them ideal for mission critical environments with zero downtime required.Our latest 100” large format display is perfect for any environment where high impact communication is required.

Highlights

Android 11

Powered by smart OS, it offers flexible app integration, seamless OTA updates, and user-friendly controls. Its open ecosystem enables third-party app installations, ensuring smart, efficient, and scalable digital signage solutions.

Smart Power

A built-in ambient light sensor automatically adjusts the screen brightness according to current light conditions. This display is Energy Star certified to help you protect the environment and save costs.

Content Management System

VisionInfo is a cloud-based platform providing end-to-end content management, scheduling, remote updates, and centralized device control.This powerful yet user-friendly platform enables seamless device management and real-time monitoring from any location.

Wireless Screen Sharing

Hisense Share’s enterprise-grade native platform enables instant cross-platform casting with low-latency precision. Optimized for dynamic workflows from boardrooms to field operations. Redefining workplace connectivity through secure, smooth screen synchronization.

Landscape and Portrait

The display seamlessly adapts to both portrait and landscape modes, enabling flexible installations in retail spaces, museums, stadiums, and corporate environments while maintaining 4K visual consistency across orientations.

500 nits

With 500 nits maximum brightness, the display panels can deliver amazingly vivid imagery maintaining vibrant color accuracy during daytime and nighttime conditions, ideal for high-traffic retail and outdoor advertising environments.

Anti-glare with 25% Haze

The 25% haze panels effectively minimize reflections while maintaining optimal image quality, make sure the critical information are always visible. Additionally, the anti-glare coatings enhance the perceived contrast ratio, delivering a sharper and more vibrant visual experience.

Captivating 4K Visuals

Featuring 90% DCI-P3 color gamut and 256-zone local dimming, it delivers more accurate color reproduction and superior image quality, offering a more immersive 4K UHD visual experience.





Specifications

Digital Display Panel

Backlight Type	DLED
Type	VA
Size	100"
Resolution	3840 x 2160
Refresh rate	60Hz
Color Depth	1.07B (10bit)
Brightness(Typ.)	500 nits
Contrast Ratio(Typ.)	5000:1
Response Time(Typ.)	8ms
Viewing Angle(Min.)	178°/178°
Color Gamut(Typ.)	90% DCI-P3
Haze	25%
Orientation	Landscape & Portrait
Lifetime	up to 50,000 hrs
Operation Hours	7Day x 24Hour

System

Operating System	Android 11
Processor CPU	ARM Cortex-A55 Quad core
Processor GPU	Mali-G52
Memory	3G DDR4
Storage	32G EMMC
Language	Simplified Chinese, English, French, German, Polish, Spanish, Russian, Italian, Finnish, Norwegian, Swedish, Hebrew, Arabic, Thai, Malay, Indonesian

Connectivity

WI-FI	2.4/5.0GHz dual,802.11a/b/g/n/ac
Bluetooth	BT5.1
Input	HDMI(2.0) x 2 DP(1.2a) x 1 USB2.0(A) x 1 USB3.0(A) x 1 RS232(RJ45) x 1 LAN(RJ45) x 1
Output	HDMI x 1 Audio(3.5mm) x 1

Physical

Bezel Color	Black
Set Dimension(W×H×D)	2234.6 x 1285.6 x 86.5mm 88 x 50.6 x 3.4 inch
Bezel width(T/L/R/B)	13.2mm(T/L/R), 19mm(B)
Net Weight	58.7kg / 129.41lbs
Packing Dimension (W×H×D)	2402×1514×297mm 94.57×59.61×11.69 inch
Gross Weight	76.2kg / 168lbs
VESA Mount	600 x 600mm (Landscape) 600 x 1000mm (Portrait), 4-M8 Screw

Power

Power Supply	AC 100~240V (50/60Hz)
Power Consumption (Typ.)	240W
Power Consumption (Max.)	450W
Standby Consumption	<0.5W (Standby Mode)

Speaker

Built in speaker	15W x 2

Environment

Operating Temperature	0°~40°C
Operating Humidity	10%~80% Non-Condensing

What's in the box

Standard	Quick Setup Guide
	Warranty Card
	Power Cord
	Remote Controller
	Battery (AAA) x 2
	RS232 Converter Cable

Certification

Standard Certification	CB / CE / ERP / South Africa Energy Efficiency / cTUVus / CEC / FCC
Safety	62368-1
Enviroment	Energy Star 8.0
EMC	Class A

Dimensions

100" 2234.6 x 1285.6 x 86.5mm / 88 x 50.6 x 3.4 inch
59.6kg / 131.4lbs

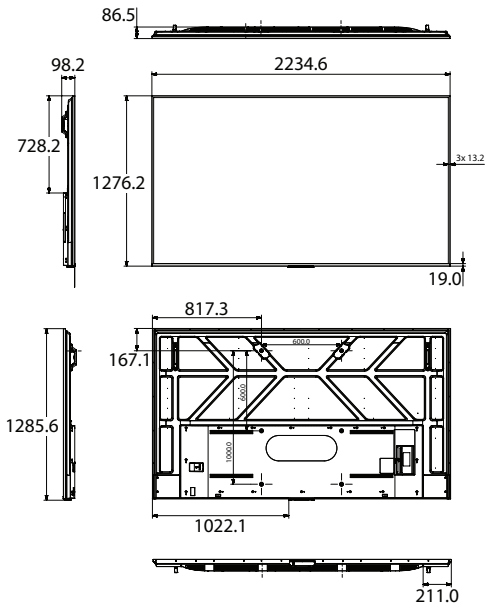

Product specifications may vary per region, and specifications are subject to change. This material may include corporate names and trademarks of third parties which are the properties of the third parties respectively.