09 HCP, 09 HCP/T

New

For High Currents

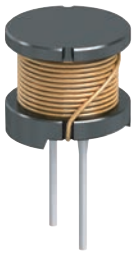

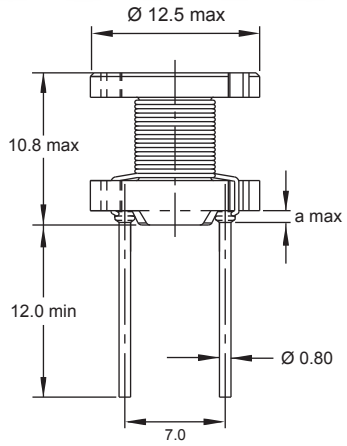

09 HCP

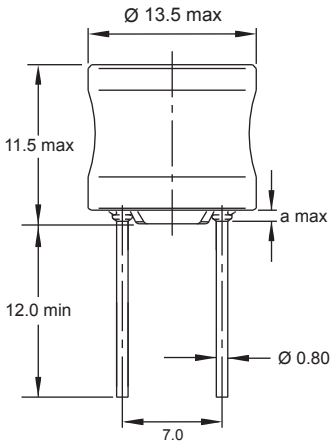

09 HCP/T
(With Tube)

Typical Ls vs Current (I)

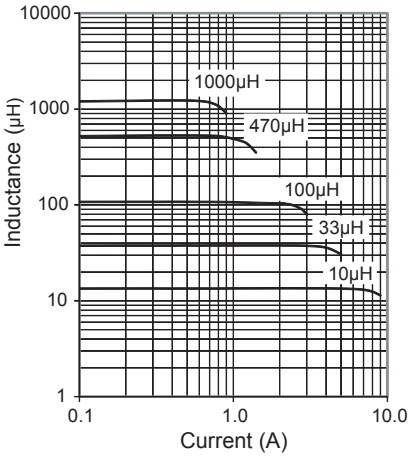

Part No	Inductance L (µH)	f_L (kHz)	Tol. ± (%)	DCR max (Ω)	Rated DC Current (A) $I_{N\,max}$	$I_{sat\,typ}$	Dimension a max
* 09HCP-100M-50	10	100 @ 1V	**20**	0.014	5.12	6.70	3.0
* 09HCP-120M-50	12	100 @ 1V	**20**	0.018	5.00	5.90	3.0
* 09HCP-150M-50	15	100 @ 1V	**20**	0.020	4.60	5.30	3.0
* 09HCP-180M-50	18	100 @ 1V	**20**	0.024	4.50	4.80	3.0
* 09HCP-220M-50	22	100 @ 1V	**20**	0.031	4.10	4.30	3.0
* 09HCP-270M-50	27	100 @ 1V	**20**	0.036	3.50	3.90	3.0
* 09HCP-330M-50	33	100 @ 1V	**20**	0.037	3.10	3.60	3.0
* 09HCP-390M-50	39	100 @ 1V	**20**	0.044	3.10	3.30	3.0
* 09HCP-470M-50	47	100 @ 1V	**20**	0.054	3.10	3.00	3.0
* 09HCP-560M-50	56	100 @ 1V	**20**	0.062	2.60	2.80	3.0
* 09HCP-680M-50	68	100 @ 1V	**20**	0.072	2.60	2.50	3.0
09HCP-820X-50	82	100 @ 1V	**10**,20	0.089	2.30	2.10	3.0
09HCP-101X-50	100	100 @ 1V	**10**,20	0.103	2.30	2.00	3.0
09HCP-121X-50	120	100 @ 1V	**10**,20	0.128	1.90	1.80	3.0
09HCP-151X-50	150	100 @ 1V	**10**,20	0.173	1.60	1.60	2.0
09HCP-181X-50	180	100 @ 1V	**10**,20	0.191	1.50	1.50	2.0
09HCP-221X-50	220	100 @ 1V	**10**,20	0.226	1.40	1.30	2.0
09HCP-271X-50	270	100 @ 1V	**10**,20	0.288	1.30	1.20	2.0
09HCP-331X-50	330	100 @ 1V	**10**,20	0.332	1.30	1.10	2.0
09HCP-391X-50	390	100 @ 1V	**10**,20	0.442	1.00	1.00	2.0
09HCP-471X-50	470	100 @ 1V	**10**,20	0.498	1.00	0.90	2.0
09HCP-561X-50	560	100 @ 1V	**10**,20	0.564	1.00	0.80	2.0
09HCP-681X-50	680	100 @ 1V	**10**,20	0.644	0.80	0.80	2.0
09HCP-821X-50	820	100 @ 1V	**10**,20	0.911	0.70	0.70	2.0
09HCP-102X-50	1000	100 @ 1V	**10**,20	1.022	0.60	0.70	2.0
09HCP-122X-50	1200	100 @ 1V	**10**,20	1.200	0.60	0.67	2.0

Core Material : Ferrite

Revision date : 27 Jul 2015

SPQ :

Packing Form	Loose / Box
Radial	250 [-50]

Remarks: Also available with shorter leads.
All are specified for 150°C EXCEPT *.