1212 FPS

RoHS Halogen Free | Mechanical Shock Vibration Proof | High Current

Semi-shielded
Engineer's Kit: EK-1212FPS-X

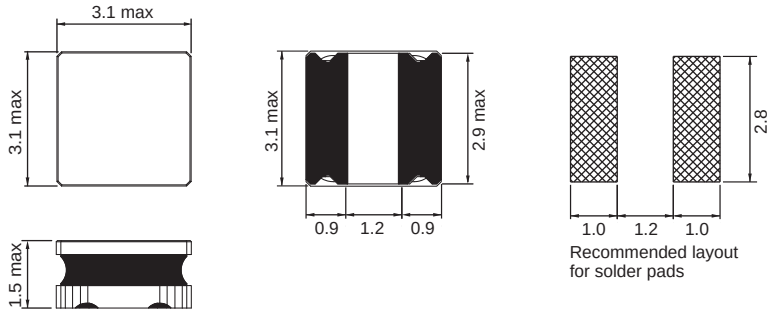

Typical Ls vs Frequency (*f*)

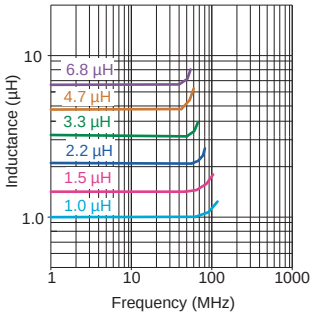

Typical Ls vs Frequency (*f*)

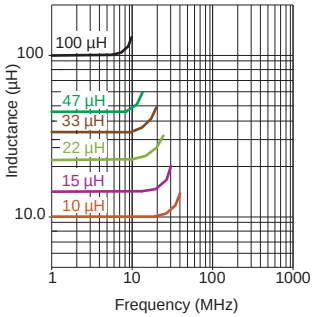

Typical Ls vs Current (I)

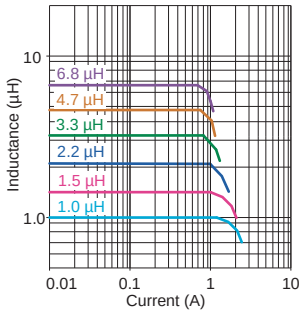

Typical Ls vs Current (I)

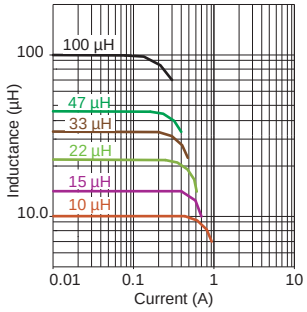

Part No	Inductance L (µH)	f_L (MHz)	Tol ± (%)	SRF min (MHz)	DCR (Ω) typ	DCR (Ω) max	Rated DC Current (A) Isat typ	Isat max	Irms typ	Irms max
1212FPS-1R0X-01	1.0	1 @ 0.1 V	20,**30**	145	0.040	0.048	2.35	2.10	2.35	2.10
1212FPS-1R5X-01	1.5	1 @ 0.1 V	20,**30**	130	0.055	0.066	2.00	1.80	2.10	1.90
1212FPS-2R2X-01	2.2	1 @ 0.1 V	20,**30**	90	0.060	0.072	1.65	1.48	1.80	1.60
1212FPS-3R3X-01	3.3	1 @ 0.1 V	20,**30**	75	0.093	0.112	1.40	1.21	1.60	1.45
1212FPS-4R7X-01	4.7	1 @ 0.1 V	20,**30**	65	0.113	0.136	1.20	1.08	1.40	1.25
1212FPS-6R8X-01	6.8	1 @ 0.1 V	20,**30**	50	0.176	0.211	1.05	0.90	1.10	0.90
1212FPS-100X-01	10	1 @ 0.1 V	20,**30**	45	0.234	0.276	0.88	0.75	1.00	0.87
1212FPS-150X-01	15	1 @ 0.1 V	20,**30**	33	0.352	0.422	0.68	0.58	0.80	0.65
1212FPS-220X-01	22	1 @ 0.1 V	20,**30**	28	0.510	0.622	0.58	0.47	0.60	0.55
1212FPS-330X-01	33	1 @ 0.1 V	20,**30**	22	0.799	0.959	0.46	0.39	0.50	0.45
1212FPS-470X-01	47	1 @ 0.1 V	20,**30**	18	1.172	1.406	0.38	0.32	0.45	0.40
1212FPS-101X-01	100	1 @ 0.1 V	20,**30**	11	2.433	2.920	0.27	0.23	0.29	0.25

Core Material: Ferrite

Revision date: 11 Mar 2022

SPQ: Taped / Reel 2000 [-01]

Chip Inductors for Power Applications

- Bold figure for **Tol%** is standard
- All dimensions in mm