PISR



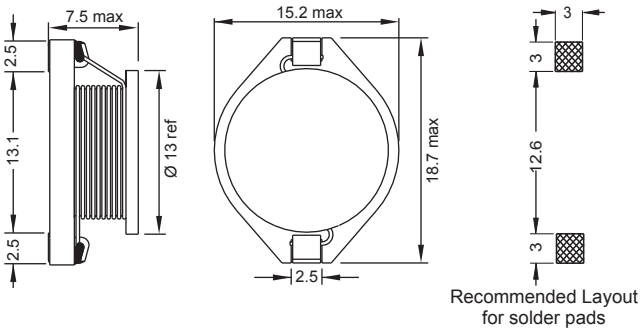

Recommended Layout
for solder pads

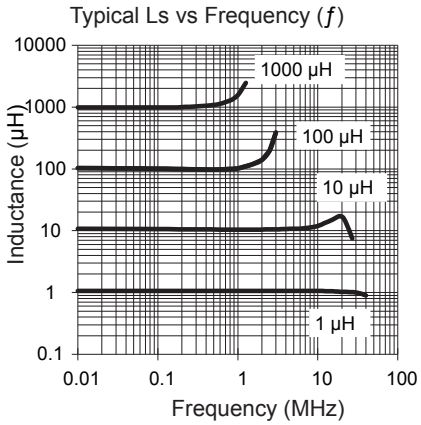

Part No	Inductance L (µH)	f_L (MHz)	Tol ± (%)	SRF min (MHz)	DCR max (Ω)	Rated DC Current (A) I_{sat}	Rated DC Current (A) $I_{\Delta T = 40°C}$
PISR-1R0M-04	1.0	0.1	20	164	0.009	21	8.6
PISR-1R5M-04	1.5	0.1	20	160	0.007	16	7.4
PISR-2R2M-04	2.2	0.1	20	95	0.014	14	7.1
PISR-3R3M-04	3.3	0.1	20	72	0.017	15	6.4
PISR-4R7M-04	4.7	0.1	20	70	0.020	12	5.5
PISR-5R6M-04	5.6	0.1	20	41	0.022	12	5.5
PISR-6R8M-04	6.8	0.1	20	35	0.029	10	4.7
PISR-100M-04	10	0.1	20	24	0.029	10	4.5
PISR-150M-04	15	0.1	20	20	0.035	8	4.1
PISR-220M-04	22	0.1	20	15	0.04	7	3.6
PISR-330M-04	33	0.1	20	10	0.06	5.6	3.1
PISR-470M-04	47	0.1	20	8	0.07	4.6	2.7
PISR-680M-04	68	0.1	20	6.5	0.10	3.6	2.3
PISR-820M-04	82	0.1	20	6.0	0.15	3.1	1.9
PISR-101M-04	100	0.1	20	5.2	0.17	3.1	1.9
PISR-151M-04	150	0.1	20	4.2	0.22	2.6	1.6
PISR-221M-04	220	0.1	20	3.3	0.34	2.2	1.3
PISR-271M-04	270	0.1	20	3.0	0.52	1.9	1.1
PISR-331M-04	330	0.1	20	2.7	0.52	1.9	1.1
PISR-471M-04	470	0.1	20	2.1	0.76	1.4	0.85
PISR-681M-04	680	0.1	20	1.8	1.10	1.2	0.74
PISR-102M-04	1000	0.1	20	1.3	1.70	1.0	0.57
PISR-472M-04	4700	0.1	20	0.76	7.20	0.35	0.22
PISR-103M-04	10000	0.1	20	0.55	18.5	0.25	0.20

Revision date : 15 Aug 2014

Core Material :
Ferrite, Plastic moulded base.
Terminal clip with lead-free tinned surface for SMT-Reflow soldering.

SPQ : Taped / Reel 350 [-04]

Remarks : I_{sat} & $I_{\Delta T}$ - see description in inductors Technical Data.

SMD Power Inductors

● All dimensions in mm