LOOP®IP Recessed downlight housing, IP44, without LED module

Article no. 27064170



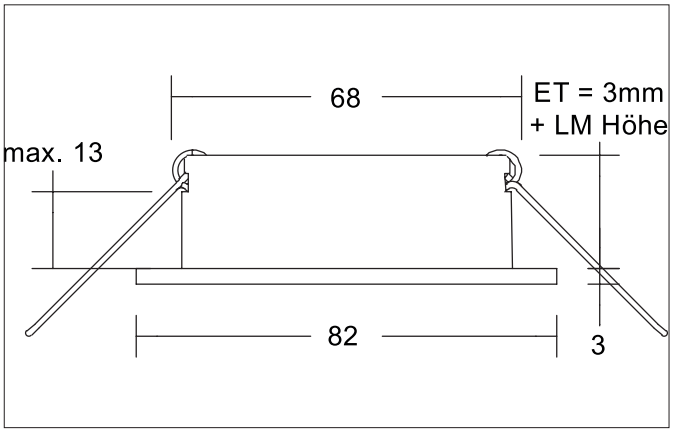

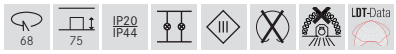

Tender
Recessed downlight housing, IP44, without LED module, white structure, Round. In a compact design, for installation in tool-less rapid assembly systems. Lamp holder: Without fitting, Mounting method: Recessed mounting, Place of installation: Ceiling-mounted, Material: Nylon/Magnesium Hydroxide/Fiberglass/Glass, Degree of protection: according to DIN EN 60529 IP44, Protection class: (EN 61140) III, Power: 10 W, Amount of light sources / fittings: 1 piece, Adjustability: Not adjustable, without control gear, Dimmable: Depending on type of control gear, Type of dimming: Depending on driver.

Product Benefits

LOOP- Light Of Ocean Plastic.

Certified LED recessed luminaire housing made from
100 % recycled ocean plastic.
Plastic waste in the sea is a global catastrophe,
that we need to do something about. We are making an important
contribution with the first luminaire whose plastic
100 percent recycled ocean plastic.
plastic”. With LOOP, we are setting new standards
for sustainable lighting solutions on the global market,
that reflect high quality, functionality and aesthetics.

All technical data as well as, weight and measurements are based on rated values and had been carefully prepared. We reserve the right to make technical changes which are are important in progressing. Product pictures are examples and can vary from the original. Subject to errors.
Date 04.02.2026 Orders are placed under our general terms and conditions under https://www.brumberg.com/en/terms-and-conditions/general-terms-and-conditions-of-sale/

BRUMBERG
Light. Since 1873.

LOOP®IP Recessed downlight housing, IP44, without LED module

Article no. 27064170

Article data	
Article no.	27064170
GTIN	4251433998600
Series name	LOOP®IP
Short description	Recessed downlight housing, IP44, without LED module
Material	Nylon/Magnesium Hydroxide/Fiberglass/Glass
Colour	white structure
Type of surface	Structure
Shape	Round
Outer diameter	82 mm
Built-in diameter min.	68 mm
Built-in diameter max.	68 mm
Installation depth	75 mm
Hight	3 mm
Weight	0.056 kg
D licence plate	No
Conformance	CE, UKCA

Operating technology of the luminaire	
System output	10 W
Voltage type	DC
Lamp	For LED
Lamp holder	Without fitting
Protection class	III
Protection class on the ceiling side	IP20
Degree of protection	IP44
Dimmable	Depending on type of control gear
Control	Depending on driver
Energy efficiency class	not required

Mounting technology	
Mounting method	Recessed mounting
Place of installation	Ceiling-mounted
Adjustability	Not adjustable
Max. ceiling thickness	13 mm
Further references	No cover with thermal insulation material
Material cover	Glass transparent
Circlip	Without circlip

Packing data	
Gross weight	0.094 kg
Length of packaging	103 mm
Packaging width	88 mm
Packaging hight	55 mm
Disposal at end of life	This product must not be disposed of with household waste. You are obliged, to dispose of such electrical waste separately. By disposing of electrical waste and other old or defective electronics separately, you support recycling or other forms of re-use. In that way you help to take care and to avoid that harmful substances get into the environment.

All technical data as well as, weight and measurements are based on rated values and had been carefully prepared. We reserve the right to make technical changes which are are important in progressing. Product pictures are examples and can vary from the original. Subject to errors.
Date 04.02.2026 Orders are placed under our general terms and conditions under https://www.brumberg.com/en/terms-and-conditions/general-terms-and-conditions-of-sale/

BRUMBERG
Light. Since 1873.

LOOP®IP Recessed downlight housing, IP44, without LED module

Article no. 27064170

Compatible LED-modu-							
Article no.	Power	Beam angle	Colour temperature	Colour rendering		Input	Hight LED-Modul
12925003	3 W	38°	2.700 K	CRI > 80		350 mA	40 mm
12926003	3 W	38°	3.000 K	CRI > 80		350 mA	40 mm
12925004	3 W	38°	4.000 K	CRI > 80		350 mA	40 mm
12923383	6 W	38°	2.700 K	CRI > 80		350 mA	32 mm
12923603	6 W	60°	2.700 K	CRI > 80		350 mA	32 mm
12927383	6 W	38°	2.700 K	CRI > 90		350 mA	32 mm
12924383	6 W	38°	3.000 K	CRI > 80		350 mA	32 mm
12924603	6 W	60°	3.000 K	CRI > 80		350 mA	32 mm
12928383	6 W	38°	3.000 K	CRI > 90		350 mA	32 mm
12924384	6 W	38°	3.500 K	CRI > 80		350 mA	32 mm
12924604	6 W	60°	3.500 K	CRI > 80		350 mA	32 mm
12928384	6 W	38°	3.500 K	CRI > 90		350 mA	32 mm
12923384	6 W	38°	4.000 K	CRI > 80		350 mA	32 mm
12923604	6 W	60°	4.000 K	CRI > 80		350 mA	32 mm
12927384	6 W	38°	4.000 K	CRI > 90		350 mA	32 mm
12920183	6 W	18°	3.000 K	CRI > 80		350 mA	31 mm
12920243	6 W	24°	3.000 K	CRI > 80		350 mA	31 mm
12920003	6 W	38°	3.000 K	CRI > 80		350 mA	31 mm
12920603	6 W	60°	3.000 K	CRI > 80		350 mA	31 mm
12920184	6 W	18°	4.000 K	CRI > 80		350 mA	31 mm
12920244	6 W	24°	4.000 K	CRI > 80		350 mA	31 mm
12920004	6 W	38°	4.000 K	CRI > 80		350 mA	31 mm
12920604	6 W	60°	4.000 K	CRI > 80		350 mA	31 mm
12963383	6 W	38°	3.000 K - 1.800 K	CRI > 90		350 mA	32 mm
12963603	6 W	60°	3.000 K - 1.800 K	CRI > 90		350 mA	32 mm
12823003	8 W	60°	2.850 K	CRI > 90		24.00 V	50 mm
12845604	8 W	60°	2.700 K - 6.500 K	CRI > 90		24.00 V	52 mm
18438002	8 W	60°	RGB+WW	CRI > 90		24.00 V	50 mm
12929503	6.3 W	50°	2.700 K / 3.000 K / 4.000 K	CRI > 80		350 mA	34 mm
12930503	5.9 W	50°	2.700 K / 3.000 K / 4.000 K	CRI > 90		350 mA	34 mm
12933553	6 W	55°	2.700 K / 3.000 K / 4.000 K + dim-2warm (3.000 K - 2.200 K)	CRI > 90		350 mA	32 mm

Optional accessories

Article no.: 81063080
Honeycomb diffuser for luminaires with ceiling cut-out 68 mm

Dimensions: 48 mm x 3 mm
https://www.brumberg.com/fileadmin/products/Datenblatt_81063080_2021_DE.pdf

Article no.: 5327
Leaf spring set (2 pieces)

https://www.brumberg.com/fileadmin/products/Datenblatt_00532700_2021_DE.pdf

All technical data as well as, weight and measurements are based on rated values and had been carefully prepared. We reserve the right to make technical changes which are are important in progressing. Product pictures are examples and can vary from the original. Subject to errors.
Date 04.02.2026 Orders are placed under our general terms and conditions under https://www.brumberg.com/en/terms-and-conditions/general-terms-and-conditions-of-sale/