EN

2TCR1

Dual-channel microprocessor controller

User guide

2TCR1_3-EN-142617-1.1
© All rights reserved
Subject to technical changes and misprints

Contents

1. Introduction ... 3
1.1. Symbols and key words ... 3
1.2. Terms and abbreviations ... 3
1.3. Intended use ... 4
1.4. Limitation of liability ... 4
1.5. Safety ... 4
1.6. Indicator symbols ... 4
2. Overview ... 5
3. Specifications and environmental conditions ... 6
3.1. Specifications ... 6
3.2. Environmental conditions ... 9
4. Mounting ... 11
4.1. Mounting the device (P1 enclosure) ... 11
4.2. Mounting the device (P2 enclosure) ... 12
4.3. Mounting the device (P5 enclosure) ... 13
5. Electrical connections ... 15
5.1. Wiring recommendations ... 15
5.2. Galvanic isolation ... 15
5.3. Startup ... 16
5.4. Terminal assignment ... 16
5.5. Connection over USB ... 16
5.6. Connection over RS485 ... 17
5.7. Sensor connection ... 17
5.7.1. General information ... 17
5.7.2. RTD (3–wire configuration) ... 18
5.7.3. RTD (2–wire configuration) ... 18
5.7.4. TC ... 19
5.7.5. U / I signals ... 19
5.8. Output connection ... 21
5.8.1. Relay output ... 21
6. Operation ... 22
6.1. Principle of operation ... 22
6.2. Indication and control ... 23
6.3. Startup and operation ... 27
7. Setup ... 28
7.1. Setup using akYtec Tool Pro ... 28
7.2. Parameter setup using front panel buttons ... 28
7.3. Input setup ... 29
7.3.1. Correction of readings ... 33
7.4. Output setup ... 34
7.5. Diagnosis of faults in control loop ... 39
7.6. Indication setup ... 41
7.6.1. Output power ... 42
7.6.2. Screen setup ... 43

7.7. RS485 setup 44
7.8. Setpoint graph setup 44
7.9. Setup of protection from editing and hiding parameters 45
7.10. Factory settings restoration 46
8. Maintenance 48
9. Scope of delivery 49
10. Transportation and storage 50
11. Warranty 51
Appendix A. Sensors 52
Appendix B. Modbus register map 54

1 Introduction

This user guide is intended to familiarize the operating personnel with the device, principle of operation, design, technical operation and maintenance of the 2TCR1 dual-channel microprocessor controller, hereinafter referred to as "device" or "2TCR1".
Connection, setup and maintenance of the device must be performed only by fully qualified personnel after reading this user guide.
The device has the following modifications. The marking is explained below:

2TCR1 – X. X X RS

Enclosure type:
P1 – panel-mounting, 96x96x53 mm, IP54 front;
P2 – panel-mounting, 96x48x100 mm, IP54 front;
P5 – panel-mounting, 48x48x103 mm, IP54 front;

Input:
R – universal measurement inputs with 2 red indicators;

Output:
R – electromagnetic relay, 8 A 220 V;

RS - RS485 inferface

1.1 Symbols and key words

WARNING
WARNING indicates a potentially dangerous situation that could result in death or serious injuries.

CAUTION
CAUTION indicates a potentially dangerous situation that could result in minor injuries.

NOTICE
NOTICE indicates a potentially dangerous situation that could result in damage to property.

NOTE
NOTE indicates helpful tips and recommendations, as well as information for efficient and trouble-free operation.

1.2 Terms and abbreviations

- **CJS** – cold junction sensor
- **CJC** – cold junction compensation
- **NSC** – nominal static characteristic
- **PC** – personal computer
- **TC** – thermocouple
- **RTD** – resistance temperature detector
- **PWM** – pulse width modulation
- **DO** — digital output
- **AI** — analog input
- **ADC** — analog digital converter

1.3 Intended use

The device has been designed and built solely for the intended use described here, and may only be used accordingly. The technical specifications contained in this document must be observed.
The device may be operated only in properly installed condition.

Improper use

Any other use is considered improper. Especially to note:
- The device may not be used for medical applications.
- The device may not be used in explosive environment.
- The device may not be used in atmosphere in which there are chemically active substances.

1.4 Limitation of liability

Our company does not bear any responsibility with respect to breakdowns or damages caused by using the product in a manner other than described in the Manual or in violation of the current regulations and technical standards.

1.5 Safety

WARNING
Ensure the mains voltage matches the voltage marked on the nameplate. Ensure the device is provided with its power supply line and electric fuse.

WARNING
The device terminals may be under a dangerous voltage. Before working on the device, de-energize it and all connected devices. Switch on the power supply only after completing all work on the device.

NOTICE
If the device is brought from a cold to a warm environment, condensation may form inside the device. To avoid damage to the device, keep the device in the warm environment for at least 1 hour before powering on.

NOTICE
Do not connect wires to unused terminals.

1.6 Indicator symbols

The indicator symbols correspond to the Latin letter as shown below:

A	b	C	d	E	F	G	H	i	J	K	L	M	n	O	P	Q	r	S	t	u	V	W	X	Y	Z

2 Overview

The device is designed to measure and automatically control temperature (using RTD or TC as sensors), as well as other physical parameters (pressure, humidity, flow, level, etc.), the value of which can be converted by sensors into DC voltage or a unified electric signal (U / I signals), in units of physical quantity or in percent of the maximum value.

Main functions:

Input signals:
- Measuring temperature, pressure, humidity, flow, level, etc. via two independent channels.
- Input signal processing:
  - Digital filtering and correction.
  - Input signal scaling.
- Calculation and indication of:
  - The square root of the measured value.
  - The weighted sum, difference and ratio of the values of two channels.
  - The weighted average and RMS sum of measured values of two channels.
- Operation with sensors connected through an intrinsic safety barrier.
- Analyzing the dynamics of input signals (growth, fall, hold).

Indication and setup:
- Displaying the current measured value, setpoint, output power, calculated mathematical function, signal dynamics on the digital indicator.
- Automatic switching of parameters displayed on the digital indicator.
- Reset the device to factory settings.
- Hiding menu items and protecting from editing parameters.

Executing mechanism control:
- Configurable logic unit operation ("heating", "cooling", signaling device, recorder).
- Independent control of two channels by two-position (relay) principle.
- Control of one measured value according to the three-position principle.
- Generation of output current 4...20 mA or voltage 0...10 V for control in accordance with "Alarm within limits”-rule;
- weather-dependent control.

Failure handling:
- Monitoring the break and "sticking" in the control loop, the sensor break and the measured signal out the limits for the selected sensor type.
- Automatic restoration of the control process when the problem of a sensor break or readings out the measuring range limits is eliminated.
- Switching the outputs to the safe state in case of failure and in the Stop mode.

USB Type-C interface:
- Device configuration via a PC.

RS485 interface:
- Data logging and device configuration via a PC over RS485.
- Remote process control (start, stop, change of modes and set points).

3 Specifications and environmental conditions

3.1 Specifications

Table 3.1 Specifications

Parameter	Value
Electrical	
Power supply	– 230 (90...264) VAC at 50 (47...63) Hz; – 24 (21...120) VDC
Power consumption, max.	– 11 VA; – 9 W
Appliance class	II
Inputs	
Number	2
Sampling time, max.	1 s
Full-scale accuracy[1)]	
– RTD	0.25 %
– TC with CJC enabled	0.5 %
– TC with CJC disabled	0.25 %
– I signals (4...20 mA, 0...5 mA, 0...20 mA)	0.25 %
– U signals (–50...+50 mV, 0...1 V, 0...5 V, 0...10 V)	0.25 %
Temperature influence	
– in current measurement mode	0.25 % of full-scale accuracy limit / 10 °C
– in voltage measurement mode	0.25 % of full-scale accuracy limit / 10 °C
– for TC, max	0.25 % of full-scale accuracy limit / 10 °C
– for RTD, max	0.25 % of full-scale accuracy limit / 10 °C
Input resistance at voltage measuring, min.	300 кΩ
Maximum permissible voltage at the measuring terminals	12 V
Time to readiness for measuring input signals, max.	10 min.
Outputs	
Number	2 (see *Table 3.4*)
Configuration interface	
Type	USB CDC
Connector	USB Type-C
Protocol	Modbus RTU
Mode	Slave

Parameter	Value
Device power supply	yes (indication works)
Consumption current, max.	500 mA
Cable length, max	3 m
Data exchange interface	
Interface	RS485
Data exchange protocol	Modbus RTU, Modbus ASCII
Mode	Slave
Baud rate	2.4; 4.8; 9.6; 14.4; 19.2; 28.8; 38.4; 57.6; 115.2 kbps
Data exchange parameters	7e1[2)], 7e2[2)], 7o1[2)], 7o2[2)], 8n1, 8n2, 8e1, 8e2, 8o1, 8o2
Device response delay	0...20 ms
Mechanical	
Dimensions	
– P1 enclosure	(96 × 96 × 53) ± 1 mm
– P2 enclosure	(96 × 48 × 100) ± 1 mm
– P5 enclosure	(48 × 48 × 103) ± 1 mm
IP code (front / rear)	IP54 / IP20
Weight (gross / net)	approx. 400 g / 250 g
Average service life	12 years

NOTE
1) Taking into account the ageing over the verification interval. For the RTD, data is with CJC enabled.
2) Modbus ASCII only.

Table 3.2 Sensors and input signals

Description	Measurement range	Measurement resolution, not less	Value of the least significant digit[1)]
RTD			
50M (α = 0,00428 °C $^{-1}$)	–180…+200 °C	0.1 °C	0.1; 1.0 °C
Pt50 (α = 0.00385 °C $^{-1}$)	–200…+850 °C		0.1; 1.0 °C
50P (α = 0.00391 °C $^{-1}$)	–200…+850 °C		0.1; 1.0 °C
Cu50 (α = 0.00426 °C $^{-1}$)	–50…+200 °C		0.1 °C
100M (α = 0.00428 °C $^{-1}$)	–180…+200 °C		0.1; 1.0 °C
Pt100 (α = 0.00385 °C $^{-1}$)	–200…+850 °C		0.1; 1.0 °C
100P (α = 0.00391 °C $^{-1}$)	–200…+850 °C		0.1; 1.0 °C
Cu100 (α=0.00426 °C $^{-1}$)	–50…+200 °C		0.1 °C
100N (α = 0.00617 °C $^{-1}$)	–60…+180 °C		0.1 °C

Description	Measurement range	Measurement resolution, not less	Value of the least significant digit[1)]
500M (α = 0.00428 °C $^{-1}$)	–180…+200 °C		0.1; 1.0 °C
Pt500 (α = 0.00385 °C $^{-1}$)	–200…+850 °C		0.1; 1.0 °C
500P (α = 0.00391 °C $^{-1}$)	–200…+850 °C		0.1; 1.0 °C
Cu500 (α = 0.00426 °C $^{-1}$)	–50…+200 °C		0.1 °C
500N (α = 0.00617 °C $^{-1}$)	–60…+180 °C		0.1 °C
1000M (α = 0.00428 °C $^{-1}$)	–180…+200 °C		0.1; 1.0 °C
Pt1000 (α = 0.00385 °C $^{-1}$)	–200…+850 °C		0.1; 1.0 °C
1000P (α = 0.00391 °C $^{-1}$)	–200…+850 °C		0.1; 1.0 °C
Cu1000 (α = 0.00426 °C $^{-1}$)	–50…+200 °C		0.1 °C
1000N (α = 0.00617 °C $^{-1}$)	–60…+180 °C		0.1 °C
TC			
L	–200…+800 °C	0.1 °C	0.1; 1.0 °C
E	–200...+900 °C	0.1 °C	0.1 °C
J	–200...+1200 °C	0.1 °C	0.1; 1.0 °C
S	–50...+1750 °C	0.2 °C	0.1; 1.0 °C
N	–200…+1300 °C	0.2 °C	0.1; 1.0 °C
K	–200...+1360 °C	0.2 °C	0.1; 1.0 °C
R	–50...+1750 °C	0.2 °C	0.1; 1.0 °C
B	+200...+1800 °C	0.2 °C	0.1; 1.0 °C
A-1	0...+2500 °C	0.4 °C	0.1; 1.0 °C
A-2	0...+1800 °C	0.2 °C	0.1; 1.0 °C
A-3	0...+1800 °C	0.2 °C	0.1; 1.0 °C
T	–250...+400 °C	0.1 °C	0.1; 1.0 °C
Unified signals			
0...1 V	0...1 V	0.1 mV	0.001 V
0...5 mA	0...5 mA	0.01 mA	0.001 mA
0...20 mA	0...20 mA	0.01 mA	0.01 mA
4...20 mA	4...20 mA	0.01 mA	0.01 mA
DC voltage signal			
–50...+50 mV	–50...+50 mV	0.01 mV	0.01/0.1[2)]

NOTE
[1)] It depends on the dPt decimal point position parameter and the value of ind.L and ind.H parameters.
[2)] It is 0.01 mV at the input signal within –19.99 ... 50.00 mV and 0.1 mV at the input signal within – 50.0...–20.0 mV.

Supported sensors and input signals for which the device is not a measurement instrument are shown in the table below.

Table 3.3 Supported sensors and input signals (not measurement instrument)

Description	Measurement range	Measurement resolution, not less	Value of the least significant digit[1)]
Unified signals			
0…5 V	0…5 V	0.1 mV	0,001 V
0…10 V	0…10 V	0.1 mV	0.001 V
Pyrometers[2)]			
RK–15	+400…+1500 °C	0.1 °C	1
RK–20	+600…+2000 °C	0.1 °C	1
RS–20	+900…+2000 °C	0.1 °C	1
RS–25	+1200…+2500 °C	0.1 °C	1
Non-standard signals[2)]			
Cu53 (α = 0.00426 °C $^{-1}$)	–50…+200 °C	0.1 °C	0.1
Typ L in accordance with DIN 43710	0…+900 °C	0.1 °C	0.1

NOTE
[1)] It depends on the dPt decimal point position parameter and the value of ind.L and ind.H parameters.
[2)] Maximum allowed basic measurement error (reduced to measurement range) is not more than 0.5% for pyrometers and not more than 0.25% for Cu53 (α = 0,00426 °C $^{-1}$).

Table 3.4 In-built output

Designation	Type	Specifications
Digital output		
R	electromagnetic relay contacts	Max current 8 A at AC voltage ≤ 250 V and cos(φ) > 0.9; Max current 3 A at DC voltage ≤ 30 V

3.2 Environmental conditions

The device is designed for natural convection cooling which should be taken into account when choosing the installation site.
The following environmental conditions must be observed:

– clean, dry and controlled environment, low dust level;
– closed non-hazardous areas, free of corrosive or flammable gases.

Table 3.5 Environmental conditions

Condition	Permissible range
Ambient temperature	-40…+55 °C
Relative humidity	up to 80 % (at +35 °C or below, non-condensing)
Altitude	up to 2000 m ASL
Vibration / shock resistance	conforms to IEC 61131-2–2017
EMC emission / immunity	

NOTE
Requirements regarding external factors are mandatory as they relate to safety requirements.

4 Mounting

4.1 Mounting the device (P1 enclosure)

To mount the device:

1. Using the supplied cutout template, prepare the mounting cutout in the control panel where the device should be mounted (see *Fig. 4.2*).
2. Ensure the sealing gasket is not damaged and installed evenly on the device enclosure.
3. Place the device with the installed gasket in the prepared mounting cutout.
4. Insert the supplied retainers in the holes on the sides of the device vertically or horizontally.

   NOTE
   The scope of delivery includes two retainers. The figures show all possible positions of the retainers.

5. Screw the supplied screws into the holes of each retainer so that the device is pressed firmly and evenly against the front of the control panel.

Removing proceeds in the reverse order.

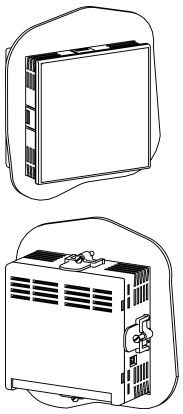

Fig. 4.1 Mounting the device (P1 enclosure)

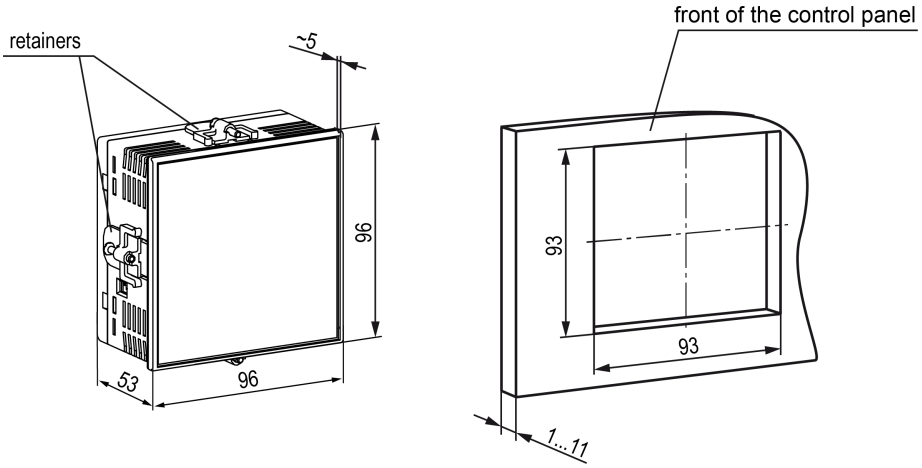

Fig. 4.2 Dimensions of P1 enclosure and mounting cutout

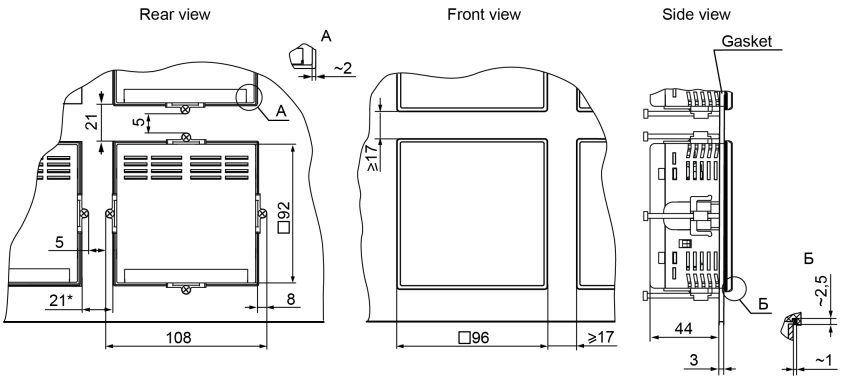

Fig. 4.3 Device in P1 enclosure mounted in 3 mm thick control panel

NOTE
* Minimum mounting distance. The recommended distance for convenient connection of the USB type-C connector is 60 mm.

4.2 Mounting the device (P2 enclosure)

To mount the device:

1. Using the supplied cutout template, prepare the mounting cutout in the control panel where the device should be mounted (see *Fig. 4.5*).

   NOTE
   The mounting cutout dimensions shown in *Fig. 4.5* are selected to ensure IP54 on the front of the control panel. When preparing the cutout, it is advisable to take into account the features of the tool used.

2. Ensure the sealing gasket is not damaged and installed evenly on the device enclosure.
3. Place the device with the installed gasket in the prepared mounting cutout.
4. Insert the supplied retainers in the holes on the sides of the device vertically or horizontally.

   NOTE
   The scope of delivery includes two retainers. The figures show all possible positions of the retainers.

5. Screw the supplied screws into the holes of each retainer so that the device is pressed firmly and evenly against the front of the control panel.

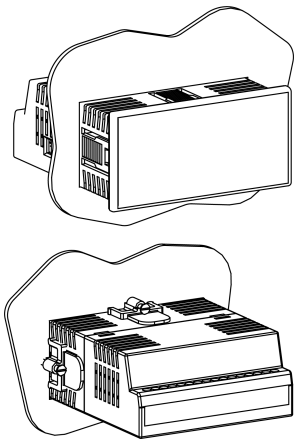

Fig. 4.4 Mounting the device (P2 enclosure)

Removing proceeds in the reverse order.

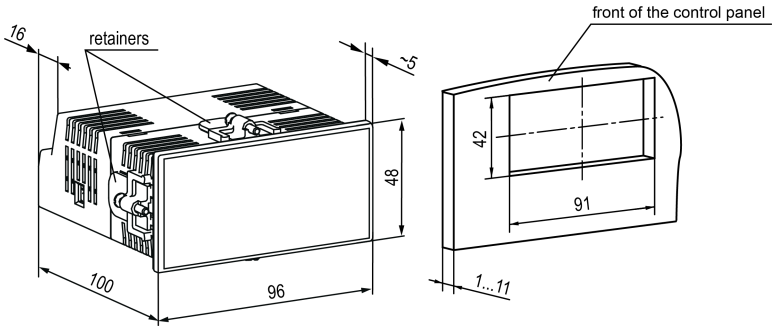

Fig. 4.5 Dimensions of P2 enclosure and mounting cutout

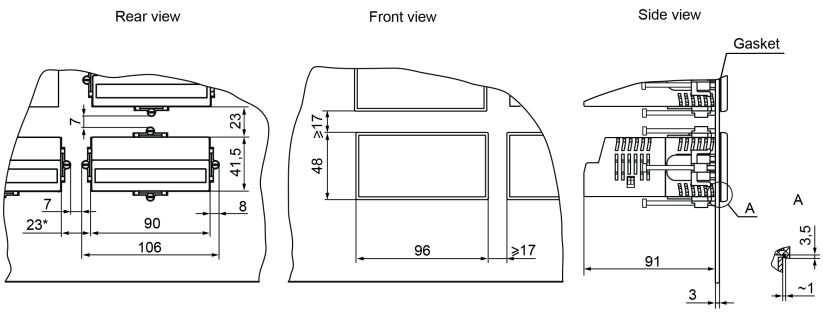

Fig. 4.6 Device in P2 enclosure mounted in 3 mm thick control panel

NOTE
* Minimum mounting distance. The recommended distance for convenient connection of the USB type-C connector is 60 mm.

4.3 Mounting the device (P5 enclosure)

To mount the device:

1. Using the supplied cutout template, prepare the mounting cutout in the control panel where the device should be mounted (see *Fig. 4.8*).
2. Ensure the sealing gasket is not damaged and installed evenly on the device enclosure.
3. Place the device with the installed gasket in the prepared mounting cutout.
4. Insert the supplied retainers in the holes on the sides of the device vertically or horizontally.

   NOTE
   The scope of delivery includes two retainers. The figures show all possible positions of the retainers.

5. Screw the supplied screws into the holes of each retainer so that the device is pressed firmly and evenly against the front of the control panel.

Removing proceeds in the reverse order.

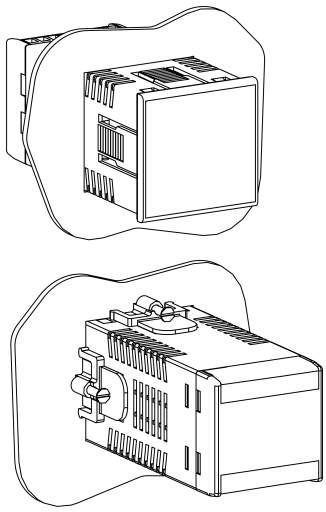

Fig. 4.7 Mounting the device (P5 enclosure)

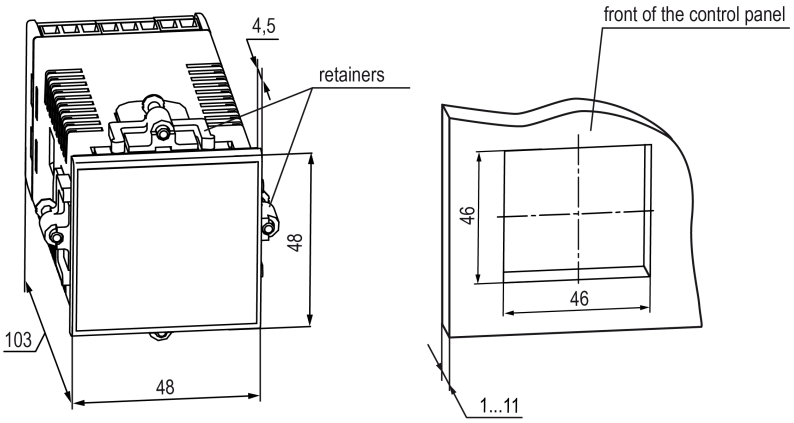

Fig. 4.8 Dimensions of P5 enclosure and mounting cutout

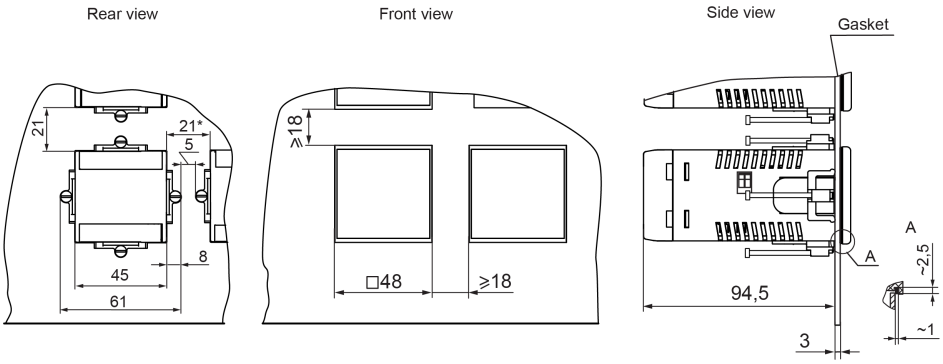

Fig. 4.9 Device in P5 enclosure mounted in 3 mm thick control panel

NOTE
* Minimum mounting distance. The recommended distance for convenient connection of the USB type-C connector is 60 mm.

5 Electrical connections

5.1 Wiring recommendations

To ensure the reliability of electrical connections, use copper single or multi-core cables. The wire ends should be carefully stripped. Multi-core wires should be tinned or use cable lugs.
Cable cross section requirements are shown in the figure below:

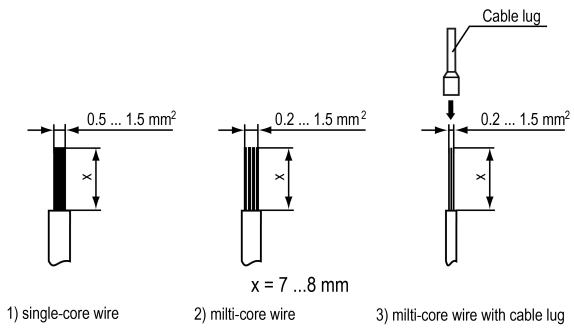

Fig. 5.1 Cable requirements

General requirements for connection lines:

- Signal cables should be routed separately from the power supply cables as well as from the cables which are sources of high-frequency and impulse interference.
- To protect the device input from the influence of industrial electromagnetic interference, the “device-sensor” communication lines should be shielded. Special cables with shielding or grounded steel pipes of suitable diameter can be used as screens. The cable shielding should be connected to the functional ground terminal (FE) in the control panel.
- Network interference filters should be installed in the power supply lines.
- Spark-suppression filters should be installed in the power equipment switching lines.

When mounting the system where the device is used, the rules for effective grounding should be taken into account:

- All grounding lines must be laid in “star”-connected circuit, ensuring good contact with the grounding element.
- All earthing circuits must be made with wires of the largest possible cross-section.
- It is forbidden to connect the device terminals with grounding lines.

5.2 Galvanic isolation

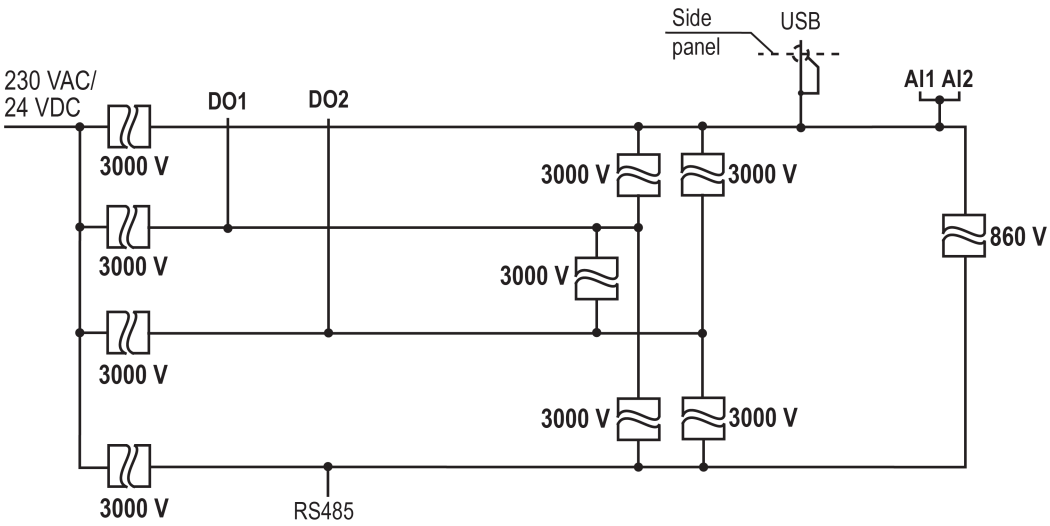

Fig. 5.2 Galvanic isolation

5.3 Startup

NOTICE
After unpacking the device, ensure it has not been damaged during transportation.

Startup procedure:

1. Connect the "device - sensors" communication lines to sensors and device inputs.
2. Connect the device to the power supply.

   NOTICE
   Check the voltage before powering on.

3. Power on the device.

   NOTICE
   To avoid damage to the object of control, do not connect the control circuits before setting up the device.

4. Set up the device.
5. Power off the device.

5.4 Terminal assignment

NOTE
If a DC power supply is used, the polarity may not be observed during connection to the mains terminals.

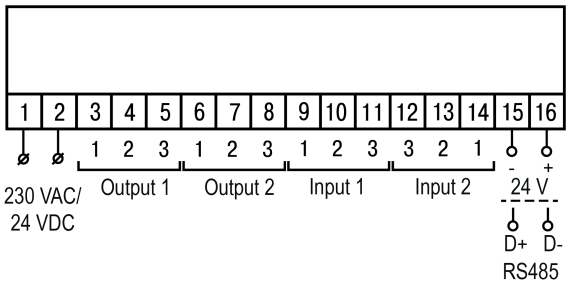

Fig. 5.3 Terminal assignment for P1 / P2 enclosure

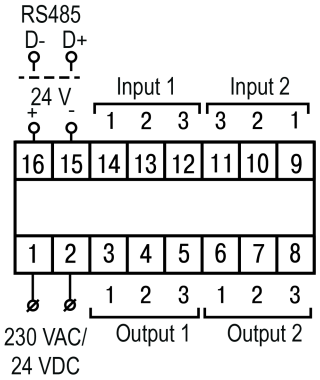

Fig. 5.4 Terminal assignment for P5 enclosure

5.5 Connection over USB

To configure the device, use the USB interface (see *Section 7.1*). Set up the device using *akYtec Tool Pro* (hereinafter referred to as well as “configurator”). Connection to *akYtec Tool Pro* is described in *Section 7.1*.

NOTE
USB is for setup only.

To connect over USB, use a USB type C — USB A cable.

NOTE
A USB cable is not included in the scope of delivery.

You can set up the device via the USB interface without main power supply. The RS485 interface doesn’t work when the device is powered via USB.
The USB slot position depends on the enclosure type and is shown in the figures below.

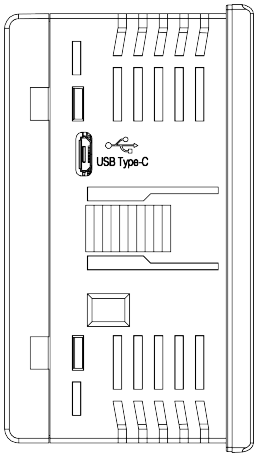

Fig. 5.5 USB slot in P1 enclosure

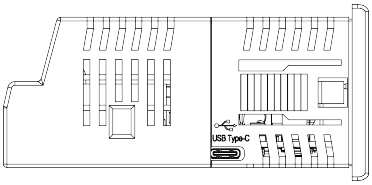

Fig. 5.6 USB slot in P2 enclosure

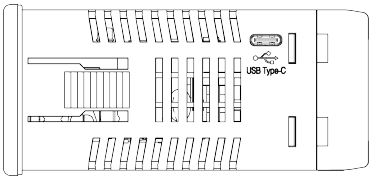

Fig. 5.7 USB slot in P5 enclosure

5.6 Connection over RS485

To exchange data in the network via the Modbus protocol, you need a network "master". The main function of the network "master" is to initialize the communication between the sender and the receiver. As the "master" of the network, you should use a PC with a connected akYtec company interface adapter or devices with the "master" function of the Modbus network (for example, a PLC, etc).
All devices in the network are connected to a serial bus. An example of device connection is shown in *Fig. 5.8*. For quality operation of transmitters/receivers and to prevent interference, you should install 120 Ω terminating resistors at the ends of the communication line. The resistor should be connected directly to the device terminals.

Example:
The device is connected to a PC via a RS485 ↔ USB interface adapter. You can use the ICA-4M device of akYtec company as the interface adapter.

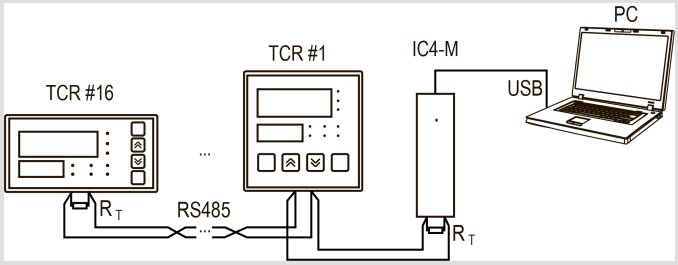

Fig. 5.8 Device connection over RS485

To operate via RS485 interface:

1. Connect the device to the RS485 network.
2. Set network parameters of the device (see *Section 7.7*).

A list of Modbus registers is given in *Appendix B.*

5.7 Sensor connection

5.7.1 General information

Measuring inputs in the device are universal, i.e. any combinations of sensors from those listed in *Table 5.1* can be connected to them.

WARNING
To protect the device input circuits from possible breakdown by static electricity charges accumulated on the “device-sensor” communication lines, before connecting to the device terminal block, de-energize the sensor and connect its wires for 1-2 seconds to the functional earthing (FE) contact of the panel.

De-energize the device during the check of the “device-sensor” communication line.
To avoid the device failure during checking of the electrical contact in the circuits, use the measuring devices with supply voltage not more than 4.5 V. At higher supply voltages of such devices it is obligatory to disconnect the sensor from the device.
Parameters of the “device-sensor” communication line are given in *Table 5.1*.

Table 5.1 Sensor line parameters

Sensor type	Line resistance, max., Ω	Line design
RTD	15	Three-wire-cable, wires of equal length and cross-section
TC	100	Thermocouple (compensating) cable
Unified I signal	100	Two-wire cable
Unified U signal	5	Two-wire cable

NOTICE
The wiring diagrams show X (e.g., X-1) instead of the input (output) number. It is recommended to check the connection by the engraving on the enclosure.

5.7.2 RTD (3–wire configuration)

The 3-wire RTD connection diagram is shown in the figure below.

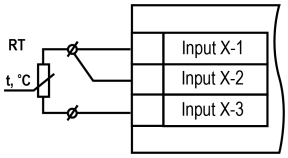

Fig. 5.9 RTD wiring (3–wire configuration)

5.7.3 RTD (2–wire configuration)

The 2-wire RTD connection diagram is shown in the figure below.

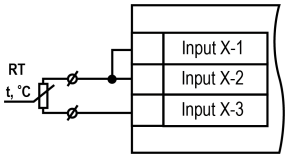

Fig. 5.10 RTD wiring (2–wire configuration)

To compensate for the wire resistance in a 2-wire configuration:

1. Before starting work, set jumpers between contacts Input X-1 and Input X-2 of the device terminal block and connect the two-wire line to contacts Input X-2 and Input X-3.
2. Connect the resistance box with accuracy class not more than 0.05 instead of the RTD sensor in the "device-sensor” communication line.
3. Set the value equal to the resistance of the RTD sensor at the temperature 0°C (according to the NSC of the used RTD).
4. Power on the device.
5. Correct the device reading at 0 °C according to *Section 7.3.1*.

NOTE
If necessary, carry out compensation of connecting wires in case of 2–wire RTD connection t in accordance with *Section 7.3.1*.

6. Exit the menu and ensure the deviation of the value on the digital indicator from the NSC does not exceed the allowed absolute error for the used RTD sensor.

Example of the allowed absolute error calculation for the 100 M sensor:

$$\Delta = \frac{X_n}{100} \cdot \gamma$$

where Δ – absolute measurement error;
γ = 0,25 % (see *Table 3.2*) – basic reduced error;
X_n = 380 °C (–180 ... +200 °C, see *Table 3.2*) – full measurement range.

$$\Delta = \frac{380}{100} \cdot 0,25 = 0,95$$

The maximum value of deviation of device readings from 0 °C for the 100M sensor should not exceed 0.95 °C.

7. Power off the device, disconnect the communication line from the resistance box and connect it to the RTD sensor.

If it is not possible to use a resistance box, compensate for wire resistance as follows:

1. Measure the total resistance of the conductors of the connecting line.
2. According to the NSC table of the corresponding sensor, determine the temperature corresponding to the measured line resistance.
3. With the sensor connected, correct the actually measured temperature upwards by the value determined in the previous point.

5.7.4 TC

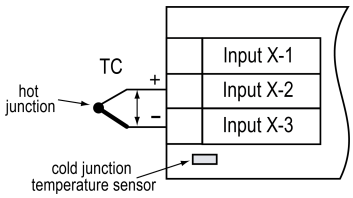

Fig. 5.11 TC wiring

Use thermocouple (compensating) cables to connect the TC to the device. Observe the polarity when connecting the compensating cables to the TC. If these conditions are not met, significant measurement errors may occur.

CAUTION
TC hot junction must be electrically insulated from external equipment!

The device has automatic compensation of the cold junction temperature. The cold junction temperature sensor is mounted near the device terminal block. The CJS can be disabled and enabled from the device menu.

5.7.5 U / I signals

NOTE
If the input is set to measure voltage or current, then when the device is turned on, the no.dt error may be displayed on the display for 10-15 seconds which disappears after the operating mode is set at the input.

Sensors can be connected directly to the input terminals of the device.

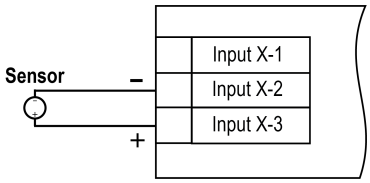

Fig. 5.12 Voltage sensor wiring (–50…+50 mV or 0...1 V)

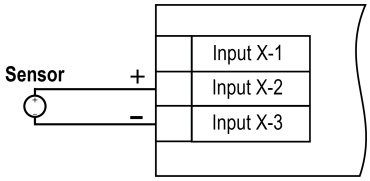

Fig. 5.13 Voltage sensor wiring (0...5 V or 0...10 V)

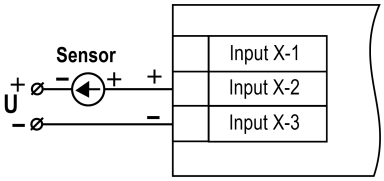

Fig. 5.14 Current sensor wiring (0...5 mA or 0 (4)...20 mA)

5.8 Output connection

5.8.1 Relay output

Relay output wiring is shown in *Fig. 5.15*.

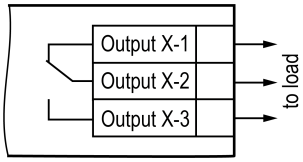

Fig. 5.15 Relay output wiring

6 Operation

6.1 Principle of operation

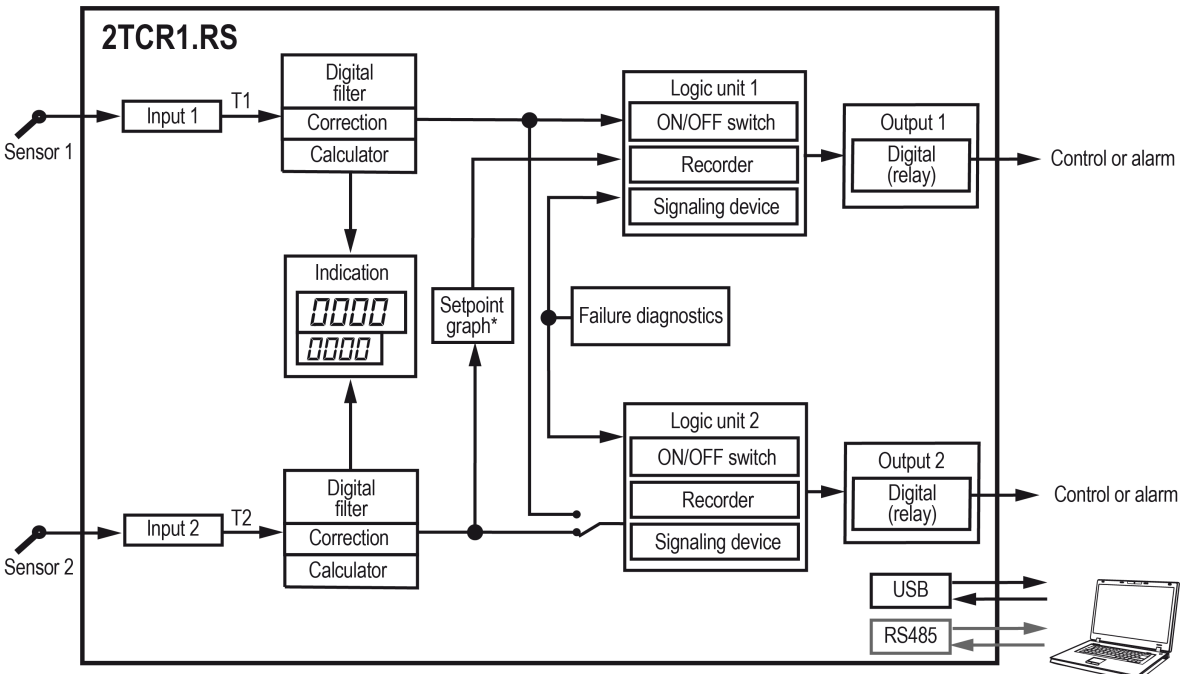

* The data for the setpoint graph does not take into account the calculated function.

Fig. 6.1 Operation diagram

The input signal is converted according to the type of sensor selected. The signal of RTD and TC sensors is converted to a temperature value according to the NSC of the selected sensor. For sensors with unified output signals, a linear signal conversion is performed.
The following functions can be used to process the measured value:

– Digital filtering of measurements (to reduce the influence of external impulse interference).
– Correction of the measuring characteristic of sensors (to eliminate the initial conversion error of input signals and errors introduced by connecting wires).
– Math functions.

The output is controlled based on the data received from the input as well as the logic unit settings. The logic unit compares the setpoint value with the input value. As a result of the comparison, the logic unit issues a command to control the output according to the selected logic.

The device has the following operating modes:

Table 6.1 Operating modes

Mode	Description
Automatic control	The setpoint value is compared with the measured input signal. Depending on the selected logic, a control signal is sent to the output
Manual control	Manual control of output power (output) via PWM. Without input feedback
Stop	The control process is stopped. Outputs are in a safe state
Error	The control process has been stopped due to a failure. Outputs are in a safe state

The device monitors the following errors:

– Internal errors.
– Input errors: sensor break, readings outside the measuring range or "sticking".
– Output errors: break of the control loop.

In case of errors, the device enters the **Error** mode (LED ST1 (ST2) is flashing). Internal and input errors are displayed to the digital indicator. The control loop break error is signaled by LED ST1 (ST2).
Any type of failure will cause the control to stop. Each channel is switched off independently of each other (only if the data from the other failed input is not involved in the calculation for the logic unit).
The failure is eliminated in one of the following ways:

– By switching the device to the **Stop** or **Manual control** mode and restarting it to the **Automatic control** mode;
– Automatically when sensor readings are restored.

6.2 Indication and control

The front panel of the device has indication and control elements:

– Two four-digit seven-segment indicators (digital indicators).
– Eight LEDs.
– Four control buttons.

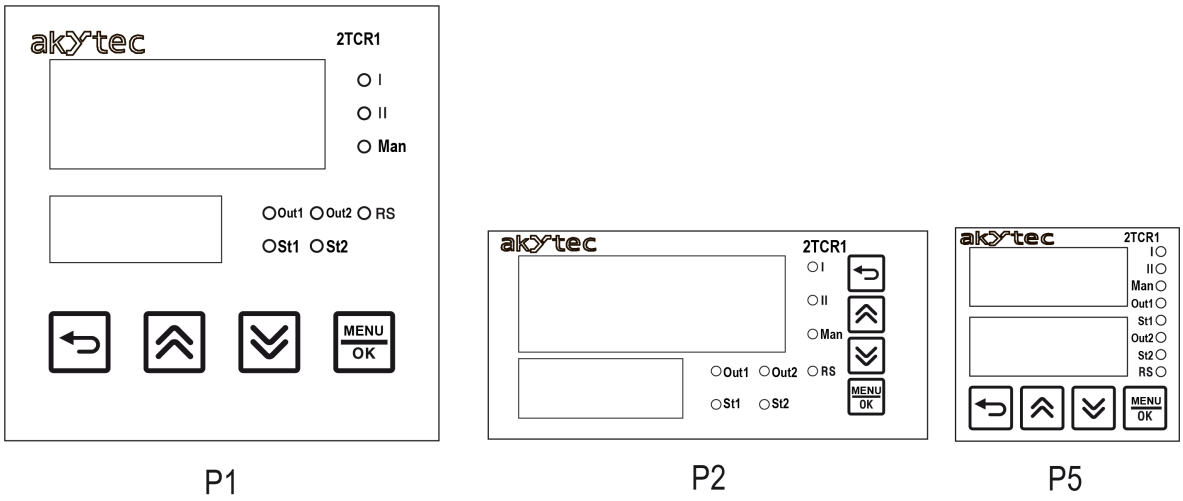

Fig. 6.2 Front panel

Digital indicators

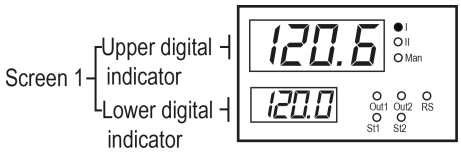

Fig. 6.3 User screen

The information is displayed on the device digital indicators. The user screen consists of the upper and lower digital indicators. The information displayed on the digital indicators can be customized (see Section 7.6). Up to six screens can be configured in the device.

Table 6.2 Information displayed on the digital indicators

Device state	Displayed information (for default settings)	
	Upper digital indicator	**Lower digital indicator**
Loading*	Device name	Firmware version
Control	Current measured value or calculated function for input 1 (for default settings)	Value of setpoint, output power, input signal dynamics
Menu	Name of setting parameter	Value of setting parameter

Device state	Displayed information (for default settings)	
	Upper digital indicator	Lower digital indicator
	Name of parameter group	Inscription nEnu
Error	Error designation of the selected measuring channel (see *Table 6.3*)	

NOTE
* After powering on, all indicators on the front panel of the device light up. Then the device name and firmware version are displayed.

Table 6.3 Error indication

Indication	Description
n0.dt	The data isn't ready yet
OCL.H	The CJC sensor has exceeded the upper measuring limit (+105 °C)
OCL.L	The CJC sensor is below the lower measurement limit (–50 °C)
HHHH	The calculated input value is above the permissible limit
LLLL	The calculated input value is below the permissible limit. The "device-sensor" communication line is broken
Hi	The calculated input value is above the permissible indication limit. The measured value can't be displayed due to the dPt parameter (decimal point position)
Lo	The calculated input value is below the permissible indication limit. The measured value can't be displayed due to the dPt parameter (decimal point position)
I - - I	Sensor break or significant exceeding of the indication range
S.mod	Service jumper activated (measuring channel 1)
F.Err	Function calculation error
Err	ADC communication error

LEDs

Table 6.4 LEDs

LED	State	Description
I	ON	The digital indicator displays the Input 1 value (including the failure value) or setup of the parameter related to channel 1 (Input 1 or Output 1) is performed
	flashing	Error at Input 1 (sensor break, readings out of the measurement range), Input 1 value is not displayed on the digital indicator
	OFF	Input 1 value is not displayed on the digital indicator and no error at Input 1
II	ON	The digital indicator displays the Input 2 value (including the failure value) or setup of the parameter related to channel 2 (Input 2 or Output 2) is performed
	flashing	Error at Input 2 (sensor break, readings out of the measurement range), Input 2 value is not displayed on the digital indicator
	OFF	Input 2 value is not displayed on the digital indicator and no error at Input 2

LED	State	Description
Man	ON	**Manual control** mode of output power
	OFF	**Automatic control** mode or **Stop** mode
Out1	ON	Output 1 closed
	flashing	Flashing rate is proportional to the PWM level
	OFF	Output 1 open
Out2	ON	Output 2 closed
	flashing	Flashing rate is proportional to the PWM level
	OFF	Output 2 open
RS	OFF	No data exchange over the RS485 interface
	ON (10 s)	Data exchange over the RS485 interface
	flashing	A package intended for this device has been detected
St1	ON	Channel 1: **Automatic control** mode
	OFF	Channel 1: **Manual control** mode of output power or **Stop** mode
	flashing	Channel 1 has switched from the **Automatic control** mode to the **Error** mode due to sensor break or readings out of measurements range
	flashing (twice)	Channel 1 has switched from the **Automatic control** mode to the **Error** mode due to control loop break
St2	ON	Channel 2: **Automatic control** mode
	OFF	Channel 2: **Manual control** mode of output power or **Stop** mode
	flashing	Channel 2 has switched from the **Automatic control** mode to the **Error** mode due to sensor break or readings out of measurements range
	flashing (twice)	Channel 2 has switched from the **Automatic control** mode to the **Error** mode due to control loop break

Control buttons

Table 6.5 Control buttons

Button	Digital indicator state	Type of pressing	Description
⮌	**Operation**	Hold for more than 2 s	Enter the menu to select the operation mode: – run – **Automatic control**. – mAn – **Manual control**. – StoP – **Stop**.
	Menu	Single press	Return to the main screen or to the previous level of the menu. Undo the change of parameter value and return to the original value
⌄	**Operation**	Hold	Display the configuration of the current screen
⌃ or	**Operation**	Single press	Switch the screens

Button	Digital indicator state	Type of pressing	Description
	Menu	Single press	Switch the menu items Change the parameter value
		Hold	Speed up the process of parameter change
MENU OK	**Operation**	Hold for more than 2 s	Enter the menu
		Single press	Switch to change the setpoint or output power
	Menu	Single press	Enter the menu item. Switch to edit the parameter. Save the changed parameter value into the device memory

Button	Digital indicator state	Type of pressing	Description
Button combinations to enter the special modes			
⌃ + ⌄	**Operation**	Hold for more than 2 s	Switch to set up protection of SCrt parameter (see *Section 7.9*)
⌃ + MENU/OK	**Operation**	Hold for more than 2 s	Reset to factory settings. Before pressing, set the jumper (see *Section 7.10*)

6.3 Startup and operation

NOTICE
If the device is brought from a cold to a warm environment, condensation may form inside the device. To avoid damage to the device, keep the device in the warm environment for at least 1 hour before powering on.

When the device is switched on, the LEDs are checked (all LEDs light up for 2 seconds).
After checking, the upper indicator will display the measured value from the sensor, the lower indicator will display the setpoint value for logic unit 1 (for the default value of the SCr. 1 parameter).

You can switch screens with ⌃ and ⌄ buttons. The screens can be configured with the SCr. 1 ... SCr.6 parameters (see *Section 7.6*). The screens can be enabled or disabled. The disabled screens are not displayed.

NOTE
The SCr. 1 screen cannot be disabled.

The SCr. 1 and SCr.2 screens are enabled by default.
To select the operation mode:

1. Press and hold (2 seconds) the ↩ button regardless of the selected screen.
2. Select the mode with ⌃ and ⌄ buttons.
3. Press the MENU/OK button to confirm.

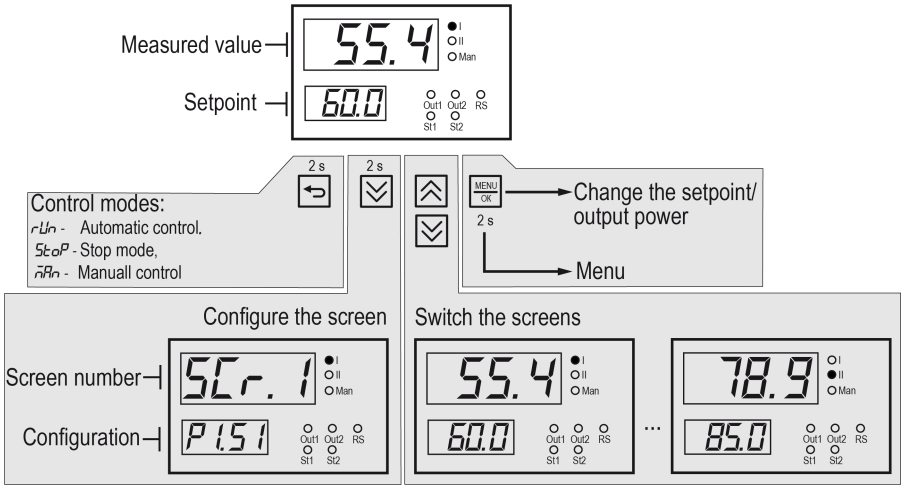

Fig. 6.4 Switching from the main screen

7 Setup

7.1 Setup using akYtec Tool Pro

You can set up the device via the USB or RS485 interfaces.
To connect to the device, you must specify:

1. The number of the COM port to which the device is connected (the IC4-M converter for setting via RS485). You can check the COM number in Windows Device Manager.

   NOTE
   Only one device can be connected to one PC.

2. Protocol — **Modbus RTU**.
3. Baud rate — **9600**.
4. Select the device model from **Devices** drop-down menu in the **Controllers** .
5. Enter any address for USB or 16 for configuration via RS485.
6. Click the **Add** button.

To get more information about the connection and operation of the device, use the HELP menu of akYtec Tool Pro or press **F1** to call up HELP in the program.

7.2 Parameter setup using front panel buttons

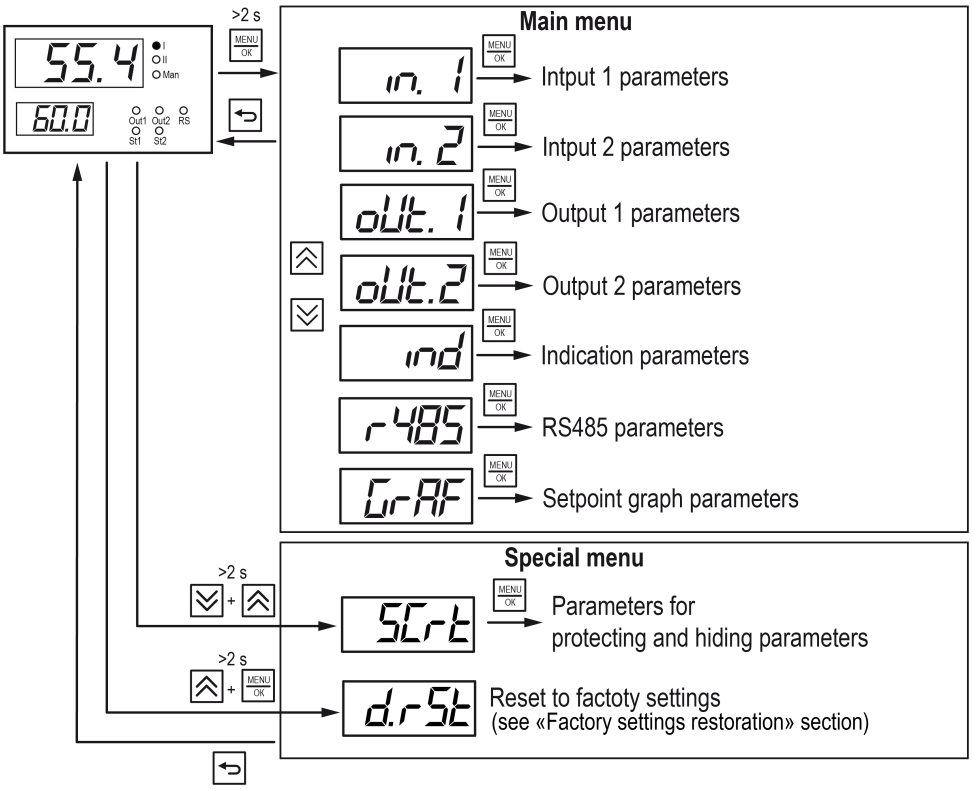

Fig. 7.1 Menu

The current parameter is edited by briefly pressing the MENU OK button.

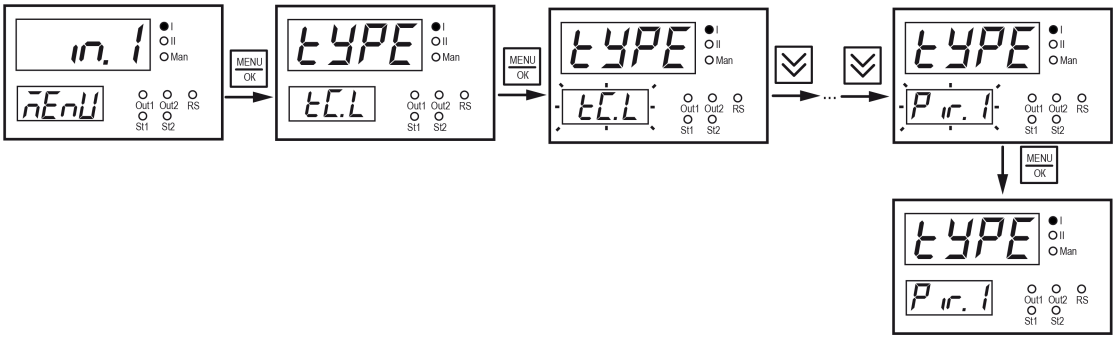

Fig. 7.2 Parameter setup

7.3 Input setup

Parameters for inputs 1 and 2 (menus in 1, in2) are given in *Table 7.1*.

Table 7.1 Input setup

Parameter	Values (1) Default values (2)		Description
	(1)	(2)	
tYPE	oFF Sensor types	tC.L	Sensor type Sensor types are given in *Appendix A.*
F iL.b*	oFF Delta-Sens**	1	Filter band Allows you to filter out single interference. The filter band is specified in units of the measured value. T_i – measured absolute value of the signal. T_{i-1} – previous absolute value of the signal. If $T_i > T_{i-1} \pm$ F iL.b, then T_i is assigned the value of $T_{i-1} \pm$ F iL.b (depending on the upward or downward movement of the value) and F iL.b = 2 * F iL.b (the filter band value is doubled). If the value of $T_i < T_{i-1} \pm$ F iL.b, the value of F iL.b is returned to the original value. A narrow filter bandwidth leads to a slower reaction to rapid changes of the input signal. When the interference level is low or when working with rapidly changing processes, it is recommended to increase the F iL.b parameter value or disable the filter stage by setting the parameter F iL.b = oFF. When working in conditions of strong interferences, it is recommended to decrease the parameter value to eliminate their influence on the device operation. 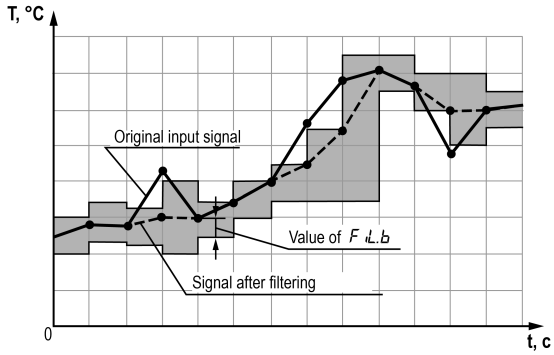

Parameter	Values (1) Default values (2) (1)	(2)	Description
F iL.t	oFF 1...999	10	Filter time constant (t_f) The interval within which the signal reaches 0.63 of the value of each T_i measurement. The signal value is calculated by the formula: $T_i = T_{i-t\Phi} + (T_i - T_{i-t\Phi}) * 0.63$. Decreasing the F iL.t parameter values leads to faster response to temperature jumps, but reduces noise immunity. Increasing of F iL.t increases the inertia and improves the noise immunity. 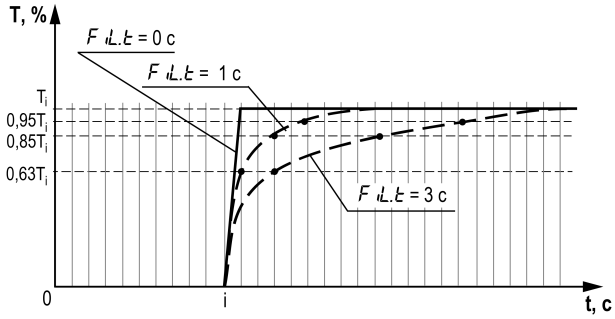
dPt	0 1 2 3 Auto	1	Decimal point position The number of decimal places that will be displayed on the digital indicator. The Auto value – point position is automatically selected to display the maximum possible number of digits. If the value cannot be displayed on the digital indicator, the H i or Lo error massages will be displayed on the digital indicator.
ind.L*	–1999...-9999	0.0	Parameters to convert the indication of measured current and voltage values to the value of a physical quantity. Parameters are adjusted for signals 0...5 mA, 0...20 mA, 4...20 mA, –50...+50 mV, 0...1 V, 0...5 V and 0...10 V. For other sensor types, these parameters are hidden. ind.L – indication at the minimum signal value (0 mA, 4 mA, –50 mV, 0 V). ind.H – indication at maximum signal value (5 mA, 20 mA, 50 mV, 1 V, 5 V, 10 V). All other intermediate indication values are arranged linearly and calculated by the device according to the formula: T = ind.L + I_X * (ind.H – ind.L), where I_X is the value of the signal from the sensor in relative units of the range from 0.000 to 1.000. Example. A sensor with output current of 4...20 mA is used to monitor pressure within the range of 0...25 atm. The ind.L parameter value is set to 0.00, the ind.H parameter value is set to 25.00. Now values will be displayed in atmospheres.
ind.H*	–1999...-9999	10-0.0	

Parameter	Values (1) Default values (2) (1)	(2)	Description
			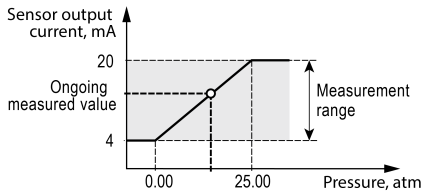
FunC		oFF	Mathematical functions
	oFF		oFF – mathematical functions are not used
	Sqrt		Sqrt – calculation of the square root from the current value: $T = \sqrt{T}$
	Sum		**NOTE** If CF1 and CF2 ≠ 1, then the formulas Sum, diFF, ASum and SQSm are calculated separately for each channel. Sum – weighted sum of values of two channels: $T = CF.1 \cdot T_1 + CF.2 \cdot T_2$
	diFF		diFF – weighted difference of values of two channels: $T = CF.1 \cdot T_1 - CF.2 \cdot T_2$
	ASum		ASum – weighted average sum of values of two channels: $T = \frac{CF.1 \cdot T_1 + CF.2 \cdot T_2}{2}$
	SQSm		SQSm – square root of the weighted average sum of the values of the two channels: $T = \sqrt{\frac{CF.1 \cdot T_1 + CF.2 \cdot T_2}{2}}$ where T is the result of the function calculation; CF.1 and CF.2 – additional coefficients for calculation of values, which are entered in the device settings; T_1 and T_2 – signals at inputs 1 and 2, respectively.
	rAt	oFF	rAt – ratio of the weighted signal at input 1 to the weighted signal at input 2 $T = \frac{CF.1 \cdot T_1}{CF.2 \cdot T_2}$ where T is the result of the function calculation; CF.1 and CF.2 – additional coefficients for calculation of values, which are entered in the device settings; T_1 and T_2 – signals at inputs 1 and 2, respectively.
CF.1	– 100.0..-.100.0	1.0	Coefficients to calculate values using mathematical functions Parameters are available when the FunC parameter is set to one of the following values: Sum, diFF, ASum and SQSm.
CF.2	– 100.0..-.100.0	1.0	
Corr* Cor.1* Cor.2*	oFF	oFF	Submenu Parameters to adjust the controller chart

Parameter	Values (1) Default values (2)		Description
	(1)	(2)	
Cor.3*	SensMin... SensMax**		They are used to compensate for the error of the connected sensors or to compensate for the wire resistance (for connection of the RTD sensor via two-wire configuration), when it is possible to determine with the help of additional equipment the exact value of the measured signal, thus correcting the readings of the device. The correction method is given in *Section 7.3.1*.
d in.t	0...30	10	Parameters of the input signal dynamics tracking function d in.t is the dynamic signal analysis sampling period. d in.d is the delta of the signal dynamics. The dynamics of signal change is analyzed for a given period (d in.t). The device subtracts the previous value from the current measured value and adds the difference to the accumulation buffer. After accumulation of the buffer for the period d in.t, the comparison of its contents with the value of the delta of the dynamics of the signal d in.d modulo is performed. 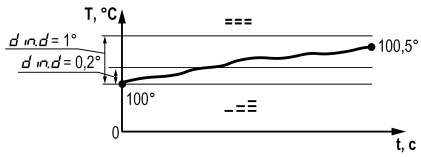 The buffer is sliding, i.e. a new value appears in the next second and the end value is excluded from the buffer. The dynamics are then recalculated. 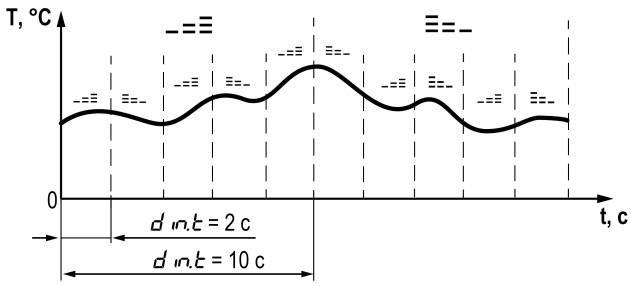 If the current buffer value is less than d in.d, the signal dynamics is defined as "no change". If the current buffer value is greater than d in.d, the dynamics is determined by the buffer sign (positive value - increasing, negative value - decreasing). When selecting the d in 1 or d in2 parameter (for Input 1 or 2 respectively), in the SCru parameter (the ind menu), the lower indicator will display the dynamics of the measured value at the corresponding input. 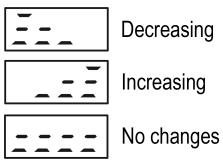
bArr	oFF	oFF	Connection of the intrinsic safety barrier
	on		**NOTE** The bArr parameter is available only for RTD sensors.

Parameter	Values (1) Default values (2)		Description
	(1)	(2)	
			Set the parameter value to on for operation with RTD sensors connected via an intrinsic safety barrier. The input resistance measurement range will be extended to compensate for the transfer impedance of the intrinsic safety barrier. To maintain measurement accuracy, it is recommended to perform the correction procedure according to the resistance compensation of the connecting wires for a three-wire line. **NOTE** With bArr = on the additional reduced error is no more than 0.5%. The value of the additional reduced error is determined by the type and characteristics of the intrinsic safety barrier used.

NOTE
* The decimal point position is determined by the dPt parameter.
** SensMin – lower limit of sensor measurement, SensMax – upper limit of sensor measurement, DeltaSens – sensor measurement range.

7.3.1 Correction of readings

To eliminate the initial conversion error of the input signals and the errors introduced by the connecting wires, the value measured by the device can be corrected.
The NSC graph is adjusted depending on the number of set points. If one point is set, the entire graph will be shifted up or down by a specified value. If two or three points are set, the graph will be plotted using splines between the two closest points that define the absolute offset or slope (see *Fig. 7.3*).

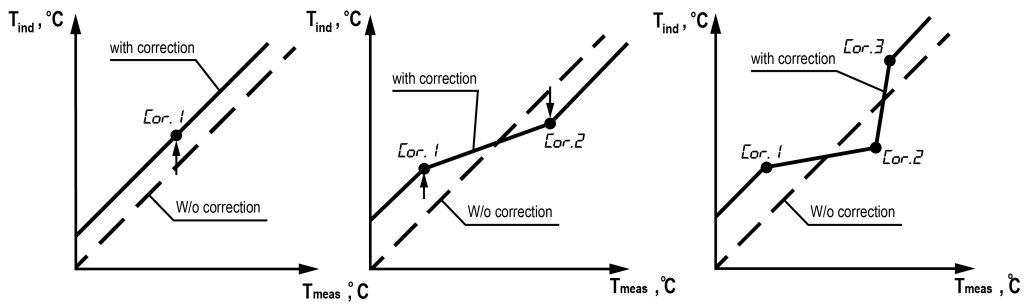

Fig. 7.3 Graph correction: T_{meas} — measured temperature, T_{ind} — temperature displayed on digital indicator

To correct the device readings:

1. Select one of the parameters Cor. 1, Cor.2 or Cor.3 and press the MENU/OK button. The adjustment will start.

   The lower digital indicator displays the measured temperature calculated according to the sensor's NSC (the value is flashing), the upper digital indicator displays the number of the correction point.

2. Using the ⌃ and ⌄ buttons, adjust the temperature value on the lower digital indicator to match the connected reference gauge of the input signal (a resistance box, voltage calibrator, current calibrator, etc.) or the readings of the reference device.

3. After setting the corrected value, press the MENU/OK button to fix readings. The corrected value will be recorded on the lower digital indicator and the indicator will stop flashing.

Pressing the [MENU OK] button briefly will display the offset value on the upper digital indicator.

If you hold down the [MENU OK] button for a long time (3 seconds), you make a request to delete the correction point. The Er5 value is flashing on the lower digital indicator.

If you press the [MENU OK] button, the correction point is deleted and the digital indicator displays oFF.

If you press the [↩], the parameter deletion process is cancelled.

NOTE
If the sensor type is changed, the correction parameters are retained. For a new sensor, delete the correction points or perform the correction again.

7.4 Output setup

Output parameters (menus out 1, out2) are given in *Table 7.2*.

Table 7.2 Output parameters

Parameter	Values (1) Default values (2)		Description
	(1)	(2)	
LoG.d			Logic type
	oFF		The controller is off. Output is in a safe state
	HEAt		On-Off "heating" control The controller is used to control the operation of the heater or alarm about the current measured value (T) is less than the setpoint value (SP). The controller is triggered by the lower limit. The output device connected to the logic unit switches on at T < SP – HYSt and switches off at T > SP + HYSt. Two-position control takes place at setpoint SP with hysteresis ± HYSt. 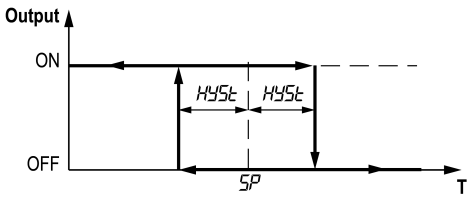
	CooL	HE-At	On-Off "cooling" control The controller is used to control the operation of the cooler or alarm about the current measured value (T) exceeds the setpoint value (SP). The controller is triggered by the upper limit. The output device connected to the logic unit switches on at T > SP + HYSt and switches off at T < SP – HYSt. 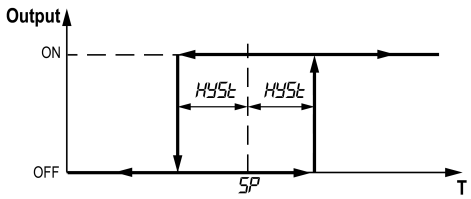
	ALrn		Alarm The alarm logic type is set in the A.tYP parameter. The alarm continues to operate in the **Stop** and **Manual control** modes. The alarm is restored when the input error is gone.

Parameter	Values (1) Default values (2)		Description
	(1)	(2)	
A.tYP		SP.u	Alarm triggering logic type The parameter appears when LoG.d = ALrm
	oFF		Alarm is off
	SP.n		The alarm switches on when the measured value is within the range SP ± A.bnd taking into account the A.HYS parameter. The A.bnd parameter is an alarm triggering threshold. The A.HYS parameter is an alarm triggering hysteresis. 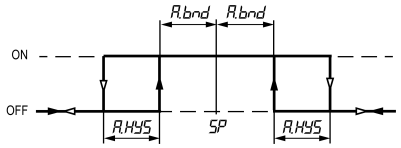
	SP.u		The alarm switches on when the measured value is out of the range SP ± A.bnd taking into account the A.HYS parameter. The A.bnd parameter is an alarm triggering threshold. The A.HYS parameter is an alarm triggering hysteresis. 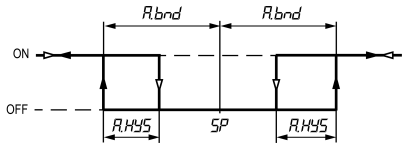
	SP.H1		The alarm switches on when the measured value exceeds SP by A.bnd. The A.bnd parameter is an alarm triggering threshold. The A.HYS parameter is an alarm triggering hysteresis. 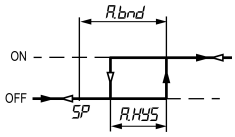
	SP.Lo		The alarm switches on when the measured value is lower SP byA.bnd. The A.bnd parameter is an alarm triggering threshold. The A.HYS parameter is an alarm triggering hysteresis. 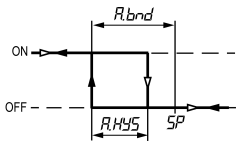
	0.n		The alarm switches on when the measured value is within the range 0 ± A.bnd taking into account the A.HYS parameter. The A.bnd parameter is an alarm triggering threshold. The A.HYS parameter is an alarm triggering hysteresis. 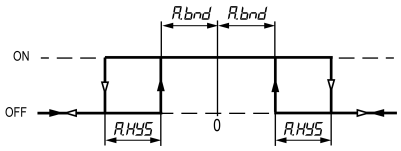
	0.u		The alarm switches on when the measured value is out of the range 0 ± A.bnd taking into account the A.HYS.

Parameter	Values (1) Default values (2) (1)	(2)	Description
			The A.bnd parameter is an alarm triggering threshold. The A.HYS parameter is an alarm triggering hysteresis. 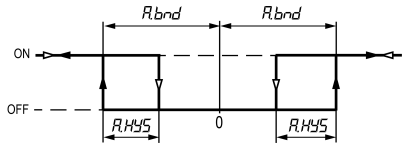
	0.H1		The alarm switches on when the measured value exceeds 0 by A.bnd. The A.bnd parameter is an alarm triggering threshold. The A.HYS parameter is an alarm triggering hysteresis. 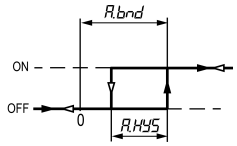
	0.Lo		The alarm switches off when the measured value exceeds 0 by A.bnd. The A.bnd parameter is an alarm triggering threshold. The A.HYS parameter is an alarm triggering hysteresis. 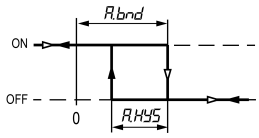
SP*	SP.Lo... SP.H1	30-.0	Setpoint The required value of the controlled variable to be maintained by the controller
SP.Lo*	Sen-sMi-n**...SP.H1	–19-9.9	Lower and upper limits to select the range of values of the setpoint parameter (SP). The limits are set in the same units as the setpoint parameter. When changing the SP.Lo and SP.H1 parameters, their values are limited by the measurement range of the current sensor at the corresponding input. **NOTE** They do not change when changing the sensor type.
SP.H1*	SP.Lo... Sen-sMax**	99-9.9	
SrC	Fun1	Fu-n2	Select a data source for logic unit 2 **NOTE** The parameter is only available for output 2 (out2). The Fun1 value – the Input 1 signal is sent to logic unit 2. This setting makes it possible to control one measured value by three-position principle. The Fun2 value– the Input 2 signal is sent to logic unit 2.
	Fun2		
HYSt*	0.. Delta-Sens**	1.0	Hysteresis The dead zone when switching the output state. It is used to avoid output bounce at input values close to the setpoint. Set in units of input measurement.
Cnt.P	1...250 s	5	Period for manual control of the output power The power is determined by the PWM period.

Parameter	Values (1) Default values (2) (1)	(2)	Description
			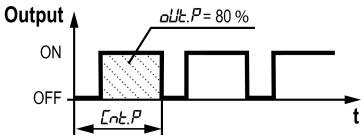 **NOTE** The minimum possible pulse length is 50 ms.
d.on	0...250 s	0	d.on – delay in switching on the controller. The time that elapses after the controller condition is triggered before the output closes. If the condition of switching on the controller is reset during this time, the countdown is reset to zero. d.oFF – delay in switching off the controller .The time that elapses after the controller condition is triggered before the output opens. If the condition of switching off the controller is reset during this time, the countdown is reset to zero. 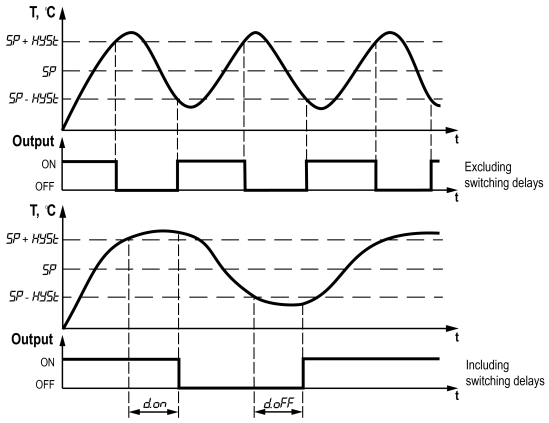
d.oFF	0...250 s	0	
H.on	0...250 s	0	H.on – minimum time for the controller to be in the ON state. After closing the output, the controller operating conditions are ignored for the set time H.oFF – minimum time for the controller to be in the OFF state. After opening the output, the controller operating conditions are ignored for the set time. 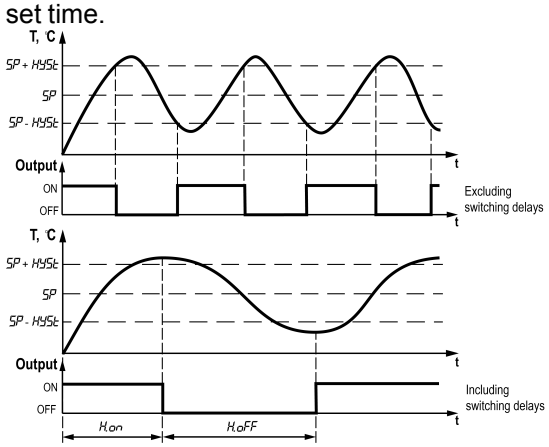 During the delay time, On-Off controller operation is suspended. All events other than alarms are ignored.
H.oFF	0...250 s	0	
A.bnd*	0... Delta-Sens**	20	Alarm triggering threshold The parameter appears when LoG.d = ALrn.

Parameter	Values (1) Default values (2)		Description
	(1)	(2)	
A.HYS*	0... Delta-Sens**	1.0	Alarm triggering hysteresis The parameter appears when LoG.d = ALrn.
F.bLC	on oFF	oFF	Blocking of the first alarm triggering **NOTE** The F.bLC parameter doesn't work at the O.Lo. comparator logic The parameter appears when LoG.d = ALrn. on – blocked. oFF – not blocked. **NOTE** The blocking is used to prevent the alarm from triggering when the device is switched on before the control system enters the preset operating mode. If after switching on the device the measured signal value of the input is outside the alarm zone, blocking of the fist alarm triggering is reset. The flag is reset when switching from the **Stop** mode to the **Automatic control** mode.
Err.d	oFF on	oFF	Output state in the **Error** mode: on – enabled. oFF – disabled
StP.d	oFF on	oFF	Output state in the **Stop** mode: on – enabled. oFF – disabled. For alarm (LoG.d = ALrn), the StP.d parameter is hidden.
LbA.t	oFF 1...9999 s	oFF	Function to diagnose the control loop break. See *Section 7.5* for function description. For alarm (LoG.d = ALrn), the LbA.t and LbA.b parameters are hidden. LbA.t – time to diagnose the control loop break When LbA.t = oFF, the function to diagnose the control loop break is disabled. LbA.b – band width of control loop break diagnostics. The parameter appears if LbA.t differs from oFF.
LbA.b*	0... Delta-Sens**	10	

Parameter	Values (1) Default values (2)		Description
	(1)	(2)	
A.rEC	oFF 0...999 s	oFF	Automatic restoration of the control process after an error at the corresponding input. If an emergency stop has occurred in the **Automatic control** mode due to sensor break or readings going beyond the measurement range, then when the measurement is restored, the control process automatically starts after A.rEC seconds. If A.rEC = oFF, to restore the **Automatic control** mode: 1. Switch to the **Manual control** or **Stop** mode. 2. Switch to the **Automatic control** mode. **NOTE** The automatic restoration of the control process does not apply to control loop break. Control loop break requires manual restoration.

NOTE
* The decimal point position is determined by the dPt parameter.
** SensMin – lower limit of sensor measurement, SensMax – upper limit of sensor measurement, DeltaSens – sensor measurement range.

7.5 Diagnosis of faults in control loop

Diagnosis of faults in the control loop is used for the ”heating” or “cooling” logic. The device monitors the system's response to a control action:

– For ”heating”: at maximum output power (output closed) the input readings increase, at open output — decrease.
– For “cooling”: at maximum output power (output closed) the input readings decrease, at open output — increase.

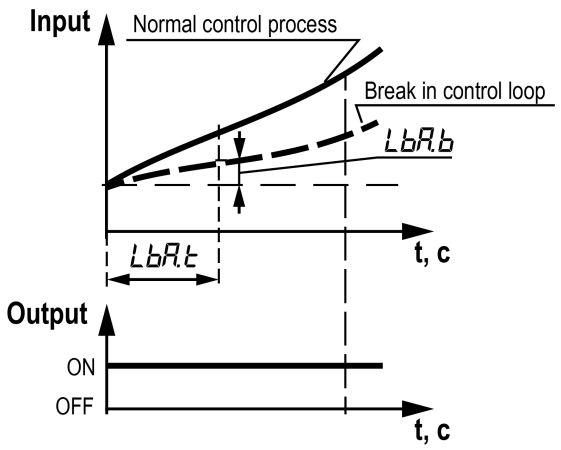

Fig. 7.4 Diagnosis of faults in control loop

When the output is closed or open, the timer LbA.t is started. If during the time LbA.t the input value changes to a value greater LbA.b, then the timer LbA.t is reset. If not, an fault is registered due to a malfunction of the control loop. LED ST (or ST1, ST2 for two-channel ones) lights up and the device stops and the outputs are switched to the safe state according to the Err.d parameter.

Principle of operation

For ”heating”:

– If the output corresponds to the maximum value, the device records the value at the input. If the input signal does not change by a value of LbA.b or more during the time LbA.t, the device detects a fault of the control loop.
– If the output corresponds to the minimum value, the device records the value at the input. If the input signal does not change by a value of LbA.b or more during the time LbA.t, the device detects a fault of the control loop.

For “cooling”:

– If the output corresponds to the maximum value, the device records the value at the input. If the input signal does not change by a value of LbA.b or more during the time LbA.t, the device detects a fault of the control loop.
– If the output corresponds to the minimum value, the device records the value at the input. If the input signal does not change by a value of LbA.b or more during the time LbA.t, the device detects a fault of the control loop.

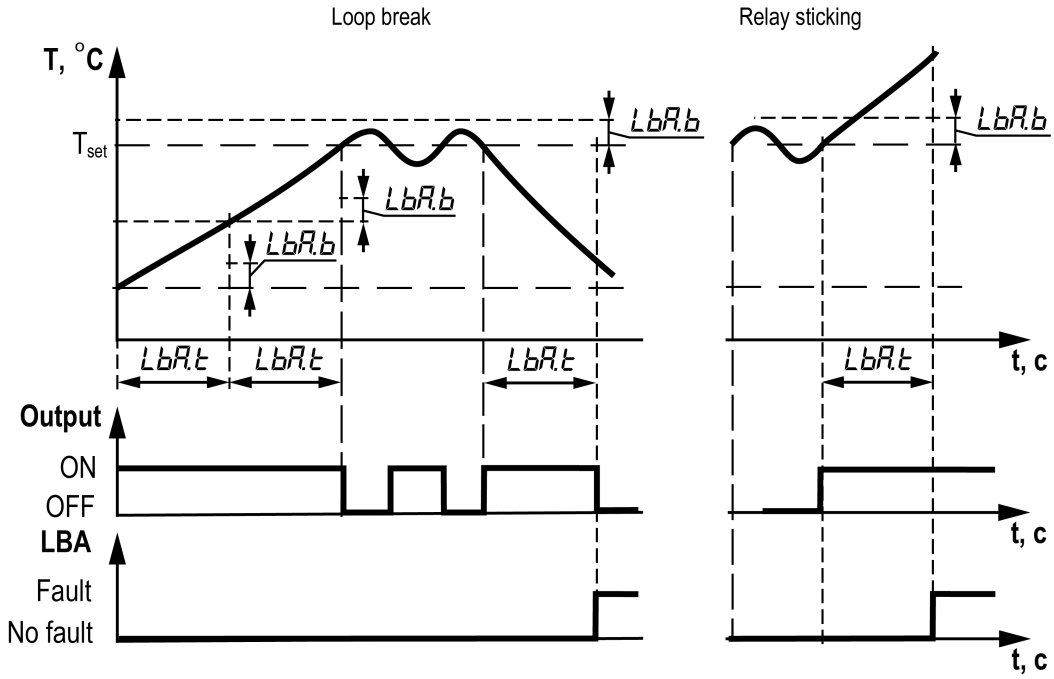

Fig. 7.5 Fault diagnosis of the control loop

If the output value changes during LbA.t, the timer is reset every time there is a change in the output or the value of the output has an intermediate value between the minimum and maximum.
If the value of the input signal has changed by LbA.b before the timer LbA.t has been triggered, then the device registers the new input value at this moment and resets the timer LbA.t (if the output is in an extreme position all this time).
For the initial selection of the time value of the loop break diagnosis (LbA.t):

1. Set the output signal to the maximum level.
2. Measure the time it takes for the measured value to change to the width of the loop break diagnostic zone (the LbA.b parameter).
3. Double the measured time and take it as the open loop diagnosis time.

The automatic recovery function (the A-EC parameter) does not work for this type of fault.
After the causes of the fault have been eliminated, the automatic control process must be resumed manually. To do this, switch the device to the **Stop** mode or **Manual control** mode and then switch it to the **Automatic control** mode.

7.6 Indication setup

Indication setup parameters (the ind menu) are given in *Table 7.3*.

Table 7.3 Indication parameters

Parameter	Values (1) Default (2) (1)	(2)	Description
Scr. 1	P1S1	P1 S1	Screen configuration setup; Display of the selected parameter values on the upper and lower indicators; The following parameters are available for display: **Description** / **Name** / **Indication** Current measured value / PV / P1(2) Setpoint / SP / S1(2) Output power (see *Section 7.6.1*) Display is set in the out.S parameter. / out.P / o1(2) The calculated value of a mathematical function / Fun / F1(F2) Dynamics of signal / din / d1(d2) The procedure for setting the screen configuration is described in *Section 7.6.2*. In the **Manual control** mode, instead of displaying the SP setpoint, the out.P value is displayed according to the out.S parameter settings. If Fun = oFF, then the inscription F.Err is displayed when the Fun1(Fun2) parameter is displayed.
	P1S2		
	P1o1		
	P1d1		
	F1S1		
	F1o1		
	F1d1		
	P2S2		
	P2S1		
	P2o2		
	P2d2		
	P1P2		
	P1F2		
	F1P2		
	F1F2		
Scr.2 Scr.3 Scr.4 Scr.5 Scr.6	oFF	P2 S2	
	P1S1		
	P2S2	oFF	
	P2S1	oFF	
	P2o1		
	P1d1		
	F1S1	oFF	
	F1o1		
	F1d1		
	P2S2	oFF	
	P2S1		
	P2S2		
	P2o2		
	P2d2		
	F2S2		
	F2o2		
	F2d2		

Parameter	Values (1) Default (2) (1)	(2)	Description
	P 1P2		
	P 1F2		
	F 1P2		
	F 1F2		
out.S	PErC	PE-rC	PErC – the percentage of output power is displayed.
	dAC		dAC – the absolute output value (4...20 mA or 0...10 V)) proportional to the selected power out.P is displayed.
rEt.t	oFF	30	Time (in seconds) for automatic return from the settings menu to the operation mode when there is no activity (pressing of buttons). The oFF value– no automatic return. **NOTE** There is no automatic return while editing a parameter.
	5		
	10		
	30		
	60		
CHG.t	oFF	oFF	Time (in seconds) for automatic change of the screens (SCr. 1 – SCr.6). The oFF value – no automatic screen change.
	5		
	10		
	30		
	60		
	120		

7.6.1 Output power

Output power (out.P).

NOTE
The out.P parameter is only available for the Modbus protocol. The parameter is not displayed in the menu.

Digital output
For a digital output, the pulse length of a digital output depends on the pulse period and the calculated power.

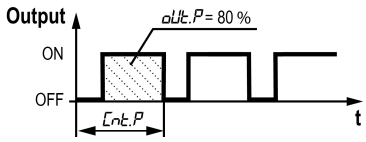

Fig. 7.6 Digital output power

D = Cnt.P × out.P / 100,
D – pulse length, s;
Cnt.P – pulse period, s;
out.P – output power.
For the **Manual control** mode, power changes are available on the digital indicator and via the Modbus protocol.
When switching from the **Stop** mode to the **Manual control** mode, the output power is equal to StP.d.

When switching from the **Automatic control** mode to the **Manual control** mode, the power is equal to the last power value in the **Automatic control** mode. When switching from the **Manual control** mode to the **Automatic control** mode, the power of the **Manual control** mode is retained.
If the device is reset in the **Manual control** mode, the output power is equal to the last set value.

7.6.2 Screen setup

To set up the screen configuration:

1. Select the screen (*SCr. 1...SCr.6*).
2. Press the MENU/OK button.

   The upper digital indicator displays the parameter to be edited (flashing): *PU 1*, *PU2*, *Fun 1*, *Fun2*.
3. Select the parameter you need.

   Once the parameter you need is selected, it is fixed (not flashing) and editing proceeds to the parameter on the lower digital indicator.
4. Select the parameter on the lower digital indicator.

   Depending on the selected value on the upper digital indicator, the following parameters are available on the lower digital indicator:

Upper digital indicator	Lower digital indicator
PU 1	*PU2*, *Fun2* , *SP 1*, *out 1*, *d in 1*
PU2	*SP2*, *out2*, *d in2*
Fun 1	*PU2*, *Fun2*, *SP 1*, *out 1*, *d in 1*
Fun2	*SP2*, *out2*, *d in2*
NOTE The parameters *out 1* and *out2* - output power displayed in units set in the *out.S* parameter.	

5. Press the MENU/OK button to fix the parameter displayed on the lower digital indicator.

   After fixation the upper digital indicator will display the screen number *SCr*..., the lower indicator will display the screen configuration as a number of abbreviated parameters.

An example of screen setup is shown in the figure below:

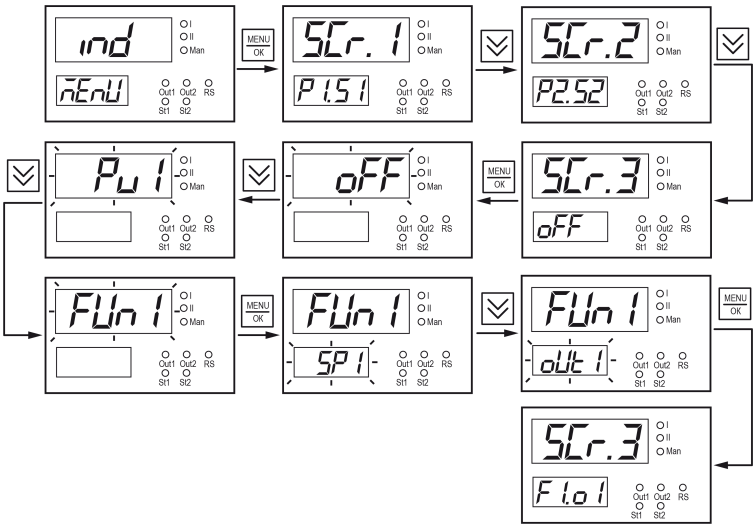

Fig. 7.7 Screen setup

7.7 RS485 setup

RS485 parameters (menu r485) are given in *Table 7.4*.

Table 7.4 RS485 parameters

Parameter	Values (1) Default (2)		Description
	(1)	(2)	
Prot	rtu	rtu	RS485 communication protocol rtu – Modbus RTU ASCI – Modbus ASCII
	ASCI		
Addr	1...247	16	RS485 device address
bAud	2,4	9,6	RS485 baud rate (Kbaud)
	4,8		
	9,6		
	14,4		
	19,2		
	28,8		
	38,4		
	57,6		
	115,2		
dPS	8n1	0	Data sending format: – **Data bits**: – 7 (for Modbus ASCII only) – 8 – **Parity**: – n – none. – o – odd. – E – even. – **Stop bits**: – 1 – 2
	8o1	1	
	8E1	2	
	8n2	3	
	8o2	4	
	8E2	5	
	7o1	6	
	7E1	7	
	7o2	8	
	7E2	9	
idLE	0...20	2	Delay (in ms) before the device responds over R485. If the value is 0, the delay is set automatically.
b.ord	msb	msb	The byte order in the register. It is required to match data packets with the Modbus Network Master. msb – big endian. LSb – little endian.
	LSb		

7.8 Setpoint graph setup

The setpoint graph is used to set the setpoint of logic unit 1 depending on the measured value at Input 2 (e.g. for weather-dependent control).

NOTE
The setpoint graph menu is hidden if tYPE (Input 2) = oFF or LoG.d/LoG.A (Output 1) = oFF.

Setpoint graph parameters (menu GrAF) are given in Table 7.5.

Table 7.5 Set point graph parameters

Parameter	Values (1) Default (2)		Description
	(1)	(2)	
GrF.n	oFF 2...10	oFF	Number of points in the setpoint graph oFF – the setpoint graph is disabled. After selecting a parameter value other than oFF, the in... and SP... parameters become available according to the selected number of points.
in. 1* SP. 1*	SensMin... SensMax**	0.0 0.0	The values of these parameters form the dependencies of the logic unit 1 setpoint on the value measured at Input 2. Values between setpoints are approximated linearly. When the signal values at Input 2 are above or below the extremes of the graph, the setpoint of Output 1 does not change (horizontal graph). 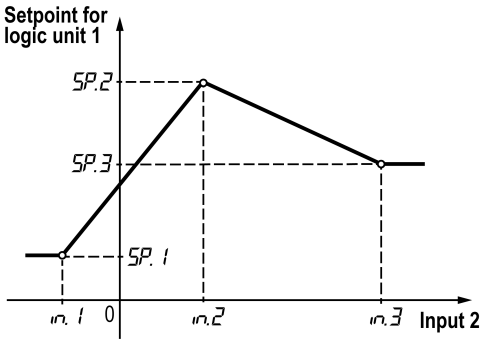 **NOTE** The values of SP... setpoints are set within the range of SP.Lo and SP.Hi.
...	...	...	
in. 10* SP. 10*	SensMin... SensMax**	0.0 0.0	

NOTE
* The position of the decimal point is determined by the dPt parameter of the corresponding channels (for SP of channel 1, for in of channel 2).
** SensMin – lower limit of sensor measurement, SensMax – upper limit of sensor measurement, DeltaSens – sensor measurement range.

7.9 Setup of protection from editing and hiding parameters

NOTE
The SCrt menu is accessed by entering the password set in the PASS parameter.

Parameters of editing protection (menu SCrt) are given in Table 7.6.

Table 7.6 Protection parameters

Parameter	Values (1) Default (2)		Description
	(1)	(2)	
PASS	0...9999	100	SCrt menu access password
Prt.E	oFF	oFF	Protection from editing parameter values To unlock or restore parameter visibility, go to the SCrt menu and set Prt.E=oFF.
	oFF		Protection is disabled, all parameters are available for editing.

Parameter	Values (1) Default (2)		Description
	(1)	(2)	
	SEtt		Locking the editing of parameters. Only editing of set points, output power, and operation mode selection is available.
	ALL		Locking the editing of all parameters. Viewing of parameters is available.
	HIdE		Hide all parameters. No access to the main settings menu.
Atr.E			Displaying the selected parameters in the menu. Each parameter of the main menu has a visibility attribute. Depending on the value of the attribute, the parameter is displayed in the menu or not.
	oFF		Enable displaying all parameters regardless of the value of their visibility attributes.
	EdIt	oFF	Manually editing the visibility attribute for each parameter After setting EdIt, the attribute values are displayed in the parameter values. You can edit with the MENU/OK button. To edit an attribute: 1. Set Atr.E = EdIt. 2. Exit the SCrt menu. 3. Enter the main menu and the submenu you need. The visibility attribute value (SHoY or HIdE) is now displayed for each parameter on the lower digital indicator. 4. Use the parameter value selection procedure to select the attribute value for individual parameters. By default, the attributes of all parameters are set to SHoY. 5. To return to the operating state of the main menu, return to the SCrt menu and select the values of the Atr.E parameter other than EdIt. SHoY – display the parameter, HIdE – hide the parameter.
	on		Parameters with the HIdE value of the visibility attribute are not displayed in the main menu. Parameters with the SHoY value of the visibility attribute are displayed. The availability of visible parameters for editing is determined by setting the Prt.E parameter in the SCrt menu.
CJS.E			Enabling / disabling the CJS
	on	on	CJS enabled
	oFF		CJS disabled

7.10 Factory settings restoration

NOTE
Restoration of factory settings resets the PASS parameter value and Corr chart adjustment parameters.

To restore to factory settings:

1. Set the jumper as shown below.

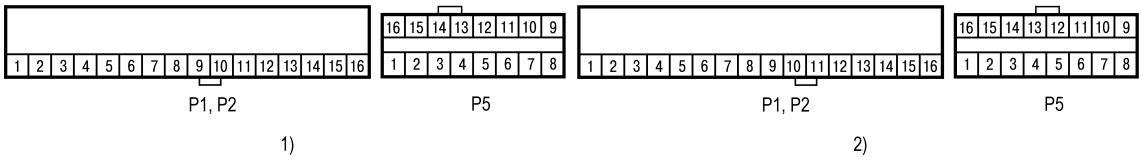

1) for all signals except for 0...10 V;
2) for signals 0...10 V.

Fig. 7.8 Jumper position

NOTICE
Before setting the jumper, make sure the sensor is not connected to Input 1.

2. Press and hold buttons ⌃ and MENU/OK on the front panel until you see d.rSt.
3. Enter password “100” and press the button MENU/OK.
4. Set the d.rSt parameter value to on.
5. The lower indicator will display rSt for 5 seconds. Then, the device will restore to factory settings.

8 Maintenance

The safety requirements (see *Section 1.5*) must be observed when the maintenance is carried out.

WARNING
Cut off all power before maintenance.

The maintenance includes:
- cleaning of the housing and terminal blocks from dust, dirt and derbis;
- checking the device fastening;
- checking the wiring (connecting wires, terminal connections, absence of mechanical damages).

NOTICE
The device should be cleaned with a dry or slightly damp cloth only. No abrasives or solvent-containing cleaners may be used.

9 Scope of delivery

– 2TCR1	1 pc.
– Gasket	1 pc.
– Short guide	1 pc.
– Fasteners	1 set
– Self-adhesive cutout template	1 pc.

NOTE
The manufacturer reserves the right to make changes to the scope of delivery.

10 Transportation and storage

Pack the device in such a way as to protect it reliably against impact for storage and transportation. The original packaging provides optimum protection.
If the device is not taken immediately after delivery into operation, it must be carefully stored at a protected location. The device should not be stored in an atmosphere with chemically active substances.
The environmental conditions must be taken into account during transportation and storage.

NOTICE
The device may have been damaged during transportation.
Check the device for transport damage and completeness!
Report the transport damage immediately to the shipper and akYtec GmbH!

11 Warranty

The manufacturer guarantees compliance of the device with the requirements of technical specifications if the conditions of operation, transportation, storage and installation are observed.
The warranty period is **5 years** from the date of sale.
In case of device failure during the warranty period under the conditions of operation, transportation, storage and installation, the manufacturer undertakes to repair or replace the device free of charge.

Appendix A. Sensors

Table A.1 Sensors

Type	Indication	Description	Display range*
No	oFF	not connected	—
RTD	C 50	Cu50	–55…+205 °C
	C 53	Cu53	–55…+205 °C
	C 100	Cu100	–55…+205 °C
	C500	Cu500	–55…+205 °C
	C 1.0	Cu1000	–55…+205 °C
	50 C	50M	–185…+205 °C
	100C	100M	–185…+205 °C
	500C	500M	–185…+205 °C
	1.0 C	1000M	–185…+205 °C
	P 50	Pt50	–205…+855 °C
	P 100	Pt100	–205…+855 °C
	P500	Pt500	–205…+855 °C
	P 1.0	Pt1000	–205…+855 °C
	50 P	50P	–205…+855 °C
	100P	100P	–205…+855 °C
	500P	500P	–205…+855 °C
	1.0 P	1000P	–205…+855 °C
	100n	100N	–65…+184,4 °C
	500n	500N	–65…+185 °C
	1.0 n	1000N	–65…+185 °C
TC	tC.L	L	–205…+805 °C
	tC.KA	K	–240…+1372 °C
	tC.J	J	–210…+1205 °C
	tC.n	N	–270…+1305 °C
	tC.t	T	–270…+405 °C
	tC.S	S	-55…+1768 °C
	tC.r	R	-55…+1768 °C
	tC.b	B	0…+1820 °C
	tC.A1	A-1	-5…+2505 °C
	tC.A2	A-2	-5…+1805 °C
	tC.A3	A-3	-5…+1805 °C
	tC.dL	Typ.L (DIN 43710)	–205…+905 °C
	tC.E	E	–268…+1000 °C

Type	Indication	Description	Display range*
Pyrometers	Pir.1	RK-15	+395,4…+1505 °C
	Pir.2	RK-20	+595,5…+2005 °C
	Pir.3	RS-20	+895,3…+2005 °C
	Pir.4	RS-25	+1195…+2505 °C
Unified signals	i0.5	0...5 mA	–0.01…5.25 mA
	i0.20	0...20 mA	–0.01…22 mA
	i4.20	4...20 mA	3.5…22 mA
	u-5.5	–50...50 mV	-55…55 mV
	u0.1	0...1 V	-0.1…1.1 V
	u5	0…5 V	-0.1 … 5.5 V
	u10	0…10 V	-1 … 11 V

NOTE
* This column specifies the ranges for displaying readings on the digital indicator. The display range is wider than the measurement range in *Table 3.2*. The errors in *Table 3.1* are given for measurement ranges.

Appendix B. Modbus register map

Table B.1 Reading and writing parameters via the Modbus protocol

Operation	Function
Read	0x03 or 0x04
Write	0x10

Access: R — read only, W — write only, R/W — read and write.

Table B.2 Common registers of operational exchange

Parameter	Description	Register address (HEX)	Access	Data type
DEVICE	Device type	1000	R	CHAR[8]
VERSION	Firmware version	1004	R	CHAR[8]
STATUS*	Device status (bit mask)	1008	R	UINT16
PU1	Input 1 value (before function applied)	1009	R	FLOAT32
PU2	Input 2 value (before function applied)	100B	R	FLOAT32
Fun1	Measured value at Input 1 (after function applied)	100D	R	FLOAT32
Fun2	Measured value at Input 2 (after function applied)	100F	R	FLOAT32
SP1	Setpoint for channel 1	1011	R/W	FLOAT32
SP2	Setpoint for channel 2	1013	R/W	FLOAT32
out.P1	Output 1 power	1015	R/W	FLOAT32
out.P2	Output 2 power	1017	R/W	FLOAT32
CtrL**	Control mode	1019	R/W	UINT16
RESET	Remote device reset	101A	W	UINT16

NOTE
* Description of STATUS register bits:
- **0** – Error at Input 1.
- **1** – Error at Input 2.
- **2** – Error in calculating the function at Input 1.
- **3** – Error in calculating the function at Input 2.
- **4** – Internal error of the device.
- **5** – Triggering Output 1.
- **6** – Triggering Output 2.
- **7** – Manual control mode is enabled.
- **8** – STOP mode is enabled.
- **9** – Break of control loop 1.
- **10** – Break of control loop 2.

NOTE
**Values of CtrL register:
- **0** – STOP;
- **1** – RUN;
- **2** – MAN.

Table B.3 Modbus register

Parameter	Description	Register address (HEX)	Access	Data type	Value range	
Input 1						
Fun 1	Measured value at input (after function applied)	0000	R	FLOAT32		
PU 1	Input value (before function applied)	0002	R	FLOAT32		
tYPE	Input sensor type	0004	R/W	UINT16	oFF	0
					C 50	1
					C 53	2
					C 100	3
					C500	4
					C 1.0	5
					50 C	6
					100C	7
					500C	8
					1.0 C	9
					P 50	10
					P 100	11
					P500	12
					P 1.0	13
					50 P	14
					100P	15
					500P	16
					1.0 P	17
					100n	18
					500n	19
					1.0 n	20
					tC.L	21
					tC.KA	22
					tC.J	23
					tC.n	24
					tC.t	25
					tC.S	26
					tC.r	27
					tC.b	28

Parameter	Description	Register address (HEX)	Access	Data type	Value range	
					tC.A1	29
					tC.A2	30
					tC.A3	31
					tC.dL	32
					tC.E	33
					Pir.1	34
					Pir.2	35
					Pir.3	36
					Pir.4	37
					i0.5	38
					i0.20	39
					i4.20	40
					u-5.5	41
					u0.1	42
					u5	43
					u10	44
FiL.b	Filter band	0005	R/W	FLOAT32	oFF, DeltaSens*	
FiL.t	Filter time constant	0007	R/W	UINT16	oFF, 1...999	
dPt	Decimal point position	0008	R/W	UINT16	0	0
					1	1
					2	2
					3	3
					Auto	4
ind.L	Lower indication limit	0009	R/W	FLOAT32	–1999...9999	
ind.H	Upper indication limit	000B	R/W	FLOAT32	–1999...9999	
FunC	Mathematical function type	000D	R/W	UINT16	oFF	0
					Srt	1
					Sun	2
					diFF	3
					ASun	4
					SSun	5
					rAt	6
ArEC	Automatic restoration of control	020B	R/W	UINT16	oFF	-1
					0…999	

Parameter	Description	Register address (HEX)	Access	Data type	Value range	
CF.1	Coefficient 1 of weighted sum	000E	R/W	FLOAT32	-100.0...100.0	
CF.2	Coefficient 2 of weighted sum	0010	R/W	FLOAT32	-100.0...100.0	
d int	Dynamic signal analysis sampling period	0012	R/W	UINT16	0...30	
d ind	Signal dynamics delta	0013	R/W	FLOAT32	0.2...DeltaSens*	
bArr	IS barrier connection	0015	R/W	UINT16	oFF	0
					on	1
Cor 1.Point	Point 1 value of input correction	0016	R/W	FLOAT32	oFF, SensMin... SensMax*	
Cor 1. oFFSEt	Offset for Point 1 of input correction	0018	R/W	FLOAT32	oFF, SensMin... SensMax*	
Cor 1.CLr	Reset of Point 1 correction	001A	R/W	UINT16	0	0
					1	1
Cor2.Point	Point 2 value of input correction	001B	R/W	FLOAT32	oFF, SensMin... SensMax*	
Cor2. oFFSEt	Offset for Point 2 of input correction	001D	R/W	FLOAT32	oFF, SensMin... SensMax*	
Cor2.CLr	Reset of Point 2 correction	001F	R/W	UINT16	0	0
					1	1
Cor3.Point	Point 3 value of input correction	0020	R/W	FLOAT32	oFF, SensMin... SensMax*	
Cor3. oFFSEt	Offset for Point 3 of input correction	0022	R/W	FLOAT32	oFF, SensMin... SensMax*	
Cor3.CLr	Reset of Point 3 correction	0024	R/W	UINT16	0	0
					1	1
Input 2						
Fun 1	Measured value at input (after function applied)	0100	R	FLOAT32		
PU 1	Input value (before function applied)	0102	R	FLOAT32		
tYPE	Input sensor type	0104	R/W	UINT16	oFF	0
					C 50	1
					C 53	2
					C 100	3
					C500	4
					C 1.0	5

Parameter	Description	Register address (HEX)	Ac-cess	Data type	Value range	
					50 C	6
					100C	7
					500C	8
					1.0 C	9
					P 50	10
					P 100	11
					P500	12
					P 1.0	13
					50 P	14
					100P	15
					500P	16
					1.0 P	17
					100n	18
					500n	19
					1.0 n	20
					tC.L	21
					tC.HA	22
					tC. ı	23
					tC.n	24
					tC.t	25
					tC.S	26
					tC.r	27
					tC.b	28
					tC.A1	29
					tC.A2	30
					tC.A3	31
					tC.dL	32
					tC.E	33
					P ır. 1	34
					P ır.2	35
					P ır.3	36
					P ır.4	37
					ı 0.5	38
					ı0.20	39
					ı4.20	40
					u-5.5	41

Parameter	Description	Register address (HEX)	Access	Data type	Value range	
					u0.1	42
					u5	43
					u10	44
FiL.b	Filter band	0105	R/W	FLOAT32	oFF, DeltaSens*	
FiL.t	Filter time constant	0107	R/W	UINT16	oFF, 1...999	
dPt	Decimal point position	0108	R/W	UINT16	0	0
					1	1
					2	2
					3	3
					Auto	4
ind.L	Lower indication limit	0109	R/W	FLOAT32	–1999...9999	
ind.H	Upper indication limit	010B	R/W	FLOAT32	–1999...9999	
FunC	Mathematical function type	010D	R/W	UINT16	oFF	0
					Srt	1
					Sun	2
					diFF	3
					ASun	4
					SSn	5
					rAt	6
din.t	Dynamic signal analysis sampling period	0112	R/W	UINT16	0...30	
din.d	Signal dynamics delta	0113	R/W	FLOAT32	0.2...DeltaSens*	
bArr	IS barrier connection	0115	R/W	UINT16	oFF	0
					on	1
Cor1.Point	Point 1 value of input correction	0116	R/W	FLOAT32	oFF, SensMin... SensMax*	
Cor1. oFFSEt	Offset for Point 1 of input correction	0118	R/W	FLOAT32	oFF, SensMin... SensMax*	
Cor1CLr	Reset of Point 1 correction	011A	R/W	UINT16	0	0
					1	1
Cor2.Point	Point 2 value of input correction	011B	R/W	FLOAT32	oFF, SensMin... SensMax*	
Cor2. oFFSEt	Offset for Point 2 of input correction	011D	R/W	FLOAT32	oFF, SensMin... SensMax*	

Parameter	Description	Register address (HEX)	Access	Data type	Value range	
Cor2.CLr	Reset of Point 2 correction	011F	R/W	UINT16	0	0
					1	1
Cor3.Point	Point 3 value of input correction	0120	R/W	FLOAT32	oFF, SensMin... SensMax*	
Cor3. oFFSEt	Offset for Point 3 of input correction	0122	R/W	FLOAT32	oFF, SensMin... SensMax*	
Cor3.CLr	Reset of Point 3 correction	0124	R/W	UINT16	0	0
					1	1
Output 1 (common)						
SP	Setpoint at output	0200	R/W	FLOAT32	SP.Lo... SP.H1	
SP.Lo	Setpoint lower limit	0202	R/W	FLOAT32	SensMin**...SP.H1	
SP.H1	Setpoint upper limit	0204	R/W	FLOAT32	SensMin**...SP.H1	
out.P	Output power	0206	R/W	FLOAT32	0..100.0	
LbA.t	Circuit break diagnostic time	0208	R/W	UINT16	oFF 1...9999 s	
LbA.b	Width of the circuit break diagnostic zone	0209	R/W	FLOAT32	0...DeltaSens**	
SrC	Input data source for logic unit 1	0x020D	R/W	UINT16	Fun 1	0
					Fun 2	1
Output 1 (digital)						
LoG.d	Logic type	0220	R/W	UINT16	oFF	0
					HEAt	1
					CooL	2
					ALrm	3
HYSt	Hysteresis	0221	R/W	FLOAT32	0..DeltaSens**	
d.on	Delay before the controller turns on	0223	R/W	UINT16	0...250 s	
d.oFF	Delay before the controller turns off	0224	R/W	UINT16	0...250 s	
H.on	Minimum time for the controller to be on	0225	R/W	UINT16	0...250 s	
H.oFF	Minimum time for the controller to be off	0226	R/W	UINT16	0...250 s	
Cnt.P	Period for manual control of output power	0227	R/W	UINT16	1..250 s	

Parameter	Description	Register address (HEX)	Access	Data type	Value range	
Err.d	Output safe state in the **Error** mode	0228	R/W	UINT16	oFF	0
					on	1
StP.d	Output state in the **Stop** mode	0229	R/W	UINT16	oFF	0
					on	1
Output 1 (Alarm) LoG.d = Alrm in group out. 1						
A.tYP	Alarm logic type	0240	R/W	UINT16	oFF	0
					SP.n	1
					SP.u	2
					SP.H,	3
					SP.Lo	4
					D.n	5
					D.u	6
					D.H,	7
					D.Lo	8
A.bnd	Alarm boundary	0241	R/W	FLOAT32	0...DeltaSens*	
A.HYS	Alarm hysteresis	0243	R/W	FLOAT32	0...DeltaSens*	
F.bLC	First alarm block	0245	R/W	UINT16	on	0
					oFF	1
Output 2 (common)						
SP	Setpoint at output	0300	R/W	FLOAT32	SP.Lo... SP.H,	
SP.Lo	Setpoint lower limit	0302	R/W	FLOAT32	SensMin**...SP.H,	
SP.H,	Setpoint upper limit	0304	R/W	FLOAT32	SensMin**...SP.H,	
out.P	Output power	0306	R/W	FLOAT32	0..100.0	
LbA.t	Circuit break diagnostic time	0308	R/W	UINT16	oFF 1...9999 s	
LbA.b	Width of the circuit break diagnostic zone	0309	R/W	FLOAT32	0...DeltaSens**	
SrC	Input data source for logic unit 1	030C	R/W	UINT16	Fun 1	0
					Fun2	1
Output 2 (digital)						
LoG.d	Logic type	0320	R/W	UINT16	oFF	0
					HEAt	1
					CooL	2
					ALrm	3
HYSt	Hysteresis	0321	R/W	FLOAT32	0..DeltaSens**	

Parameter	Description	Register address (HEX)	Access	Data type	Value range	
d.on	Delay before the controller turns on	0323	R/W	UINT16	0...250 s	
d.oFF	Delay before the controller turns off	0324	R/W	UINT16	0...250 s	
H.on	Minimum time for the controller to be on	0325	R/W	UINT16	0...250 s	
H.oFF	Minimum time for the controller to be off	0326	R/W	UINT16	0...250 s	
Cnt.P	Period for manual control of output power	0327	R/W	UINT16	1..250 s	
Err.d	Output safe state in the **Error** mode	0328	R/W	UINT16	oFF	0
					on	1
StP.d	Output state in the **Stop** mode	0329	R/W	UINT16	oFF	0
					on	1
Output 2 (Alarm) LoG.d = Alrm in group out.2						
A.tYP	Alarm logic type	0340	R/W	UINT16	oFF	0
					SP.n	1
					SP.u	2
					SP.H	3
					SP.Lo	4
					D.n	5
					D.u	6
					D.H	7
					D.Lo	8
A.bnd	Alarm boundary	0341	R/W	FLOAT32	0...DeltaSens*	
A.HYS	Alarm hysteresis	0343	R/W	FLOAT32	0...DeltaSens*	
F.bLC	First alarm block	0345	R/W	UINT16	on	0
					oFF	1
Indication						
SCr 1	User screen 1	0400	R/W	UINT16	P 1S 1	1
					P Io 1	2
					P Id 1	3
					F 1S 1	4
					F Io 1	5
					F Id 1	6

Parameter	Description	Register address (HEX)	Ac-cess	Data type	Value range	
					P 1P2	13
					F 1P2	15
					F 1F2	16
SCr2	User screen 2...6	0401	R/W	UINT16	oFF P 1S 1 P Io 1 P Id 1 F 1S 1 F Io 1 F Id 1 P 1P2 F 1P2 F 1F2	0 1 2 3 4 5 6 13 15 16
SCr3		0402	R/W	UINT16		
SCr4		0403	R/W	UINT16		
SCr5		0404	R/W	UINT16		
SCr6		0405	R/W	UINT16		
out.S	Select the absolute or relative power	0406	R/W	UINT16	PErC	0
					dAC	1
rEt.t	Delay before the device returns from the settings menu	0407	R/W	UINT16	oFF	0
					5	1
					10	2
					30	3
					60	4
CHG.t	Screen switching time	0408	R/W	UINT16	oFF	0
					5	1
					10	2
					30	3
					60	4
					120	5
RS485						
Prot	Communication protocol	0500	R/W	UINT16	rtu	0
					ASC I	1
Addr	Device address in the Modbus network	0501	R/W	UINT16	1...247	
bAud	Baud rate	0502	R/W	UINT16	2,4	0
					4,8	1
					9,6	2
					14,4	3
					19,2	4
					28,8	5
					38,4	6
					57,6	7

Parameter	Description	Register address (HEX)	Ac-cess	Data type	Value range	
					115,2	8
dPS	Data sending format	0503	R/W	UINT16	8n1	0
					8o1	1
					8E1	2
					8n2	3
					8o2	4
					8E2	5
					7o1	6
					7E1	7
					7o2	8
					7E2	9
idLE	Device response delay	0504	R/W	UINT16	0...20	
b.ord	Byte order in the register	0505	R/W	UINT16	MSb	0
					LSb	1
APLY	Apply the RS485 settings	0506	R/W	UINT16	0	0
					1	1
Setpoint graph						
GrF.n	Number of points in the set point graph	0600	R/W	UINT16	oFF, 2...10	
in.1	Input value for Point 1	0601	R/W	FLOAT32	SensMin... SensMax*	
SP.1	Setpoint for Point 1	0603	R/W	FLOAT32	SensMin... SensMax*	
in.2	Input value for Point 2	0605	R/W	FLOAT32	SensMin... SensMax*	
SP.2	Setpoint for Point 2	0607	R/W	FLOAT32	SensMin... SensMax*	
in.3	Input value for Point 3	0609	R/W	FLOAT32	SensMin... SensMax*	
SP.3	Setpoint for Point 3	060B	R/W	FLOAT32	SensMin... SensMax*	
in.4	Input value for Point 4	060D	R/W	FLOAT32	SensMin... SensMax*	
SP.4	Setpoint for Point 4	060F	R/W	FLOAT32	SensMin... SensMax*	
in.5	Input value for Point 5	0611	R/W	FLOAT32	SensMin... SensMax*	
SP.5	Setpoint for Point 5	0613	R/W	FLOAT32	SensMin... SensMax*	

Parameter	Description	Register address (HEX)	Access	Data type	Value range	
in.6	Input value for Point 6	0615	R/W	FLOAT32	SensMin... SensMax*	
SP.6	Setpoint for Point 6	0617	R/W	FLOAT32	SensMin... SensMax*	
in.7	Input value for Point 7	0619	R/W	FLOAT32	SensMin... SensMax*	
SP.7	Setpoint for Point 7	061B	R/W	FLOAT32	SensMin... SensMax*	
in.8	Input value for Point 8	061D	R/W	FLOAT32	SensMin... SensMax*	
SP.8	Setpoint for Point 8	061F	R/W	FLOAT32	SensMin... SensMax*	
in.9	Input value for Point 9	0621	R/W	FLOAT32	SensMin... SensMax*	
SP.9	Set point for Point 9	0623	R/W	FLOAT32	SensMin... SensMax*	
in.10	Input value for Point 10	0625	R/W	FLOAT32	SensMin... SensMax*	
SP.10	Setpoint for Point 10	0627	R/W	FLOAT32	SensMin... SensMax*	
Hidden parameters menu						
PASS	Menu access password	0800	R/W	UINT16	0...9999	
Prt.E	Protection from editing the parameter values	0801	R/W	UINT16	oFF	0
					SEtt	1
					ALL	2
					HidE	3
Atr.E	Enabling the attributes to hide parameters	0802	R/W	UINT16	oFF	0
					on	1
					Edit	2
CJS.E	Enabling / disabling CJS	0803	R/W	UINT16	on	0
					oFF	1

NOTE
* SensMin – lower limit of sensor measurement, SensMax – upper limit of sensor measurement, DeltaSens – sensor measurement range.