USER MANUAL

OSCILLOSCOPE

PCE-OC 6

ENGLISH

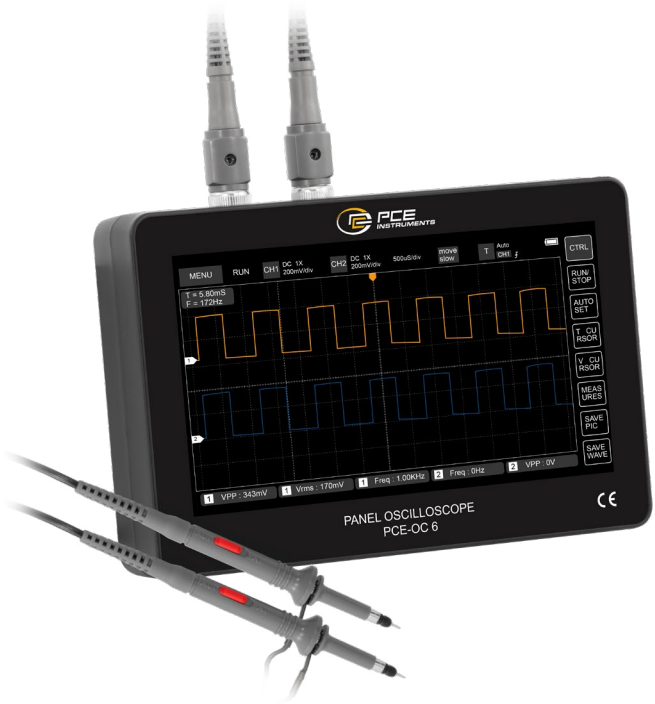

User manuals in various languages (français, italiano, español, português, nederlands, türk, polski) can be found via our product search on:
www.pce-instruments.com

PRODUCT INTRODUCTION

PCE-OC 6 is a full-featured, highly practical, cost-effective dual-channel flat-panel oscilloscope for the maintenance and R & D industry; this oscilloscope has a real-time sampling rate of 1 GSa / s and an analog bandwidth of 100MHz * 2. With complete trigger function (single /normal/ automatic), it can be used freely for periodic analog signals or non-periodic digital signals; the built-in high-voltage protection module can tolerate a continuous voltage of up to 400V. Oscilloscope burnout accident caused by the probe being turned to the 10X position. Large time base scroll mode can monitor slow level changes;

Equipped with highly efficient one-key AUTO, which can display the measured waveform without tedious adjustments; the display is equipped with a 7-inch 800 * 480 resolution high-definition LCD screen, and the operation method is capacitor Screen touch + gesture operation, extremely convenient; cursor measurement function, you do not need to read the background scale unit and quantity when manually reading the amplitude and frequency parameters, and you can directly get the peak, peak and frequency without conversion; extremely convenient screenshot and waveform storage function, built-in 1 GB storage space, can store up to 1000 screenshots + 1000 sets of waveform data, the storage process is simple and fast, save the current waveform anytime, anywhere with a single touch, no cumbersome prompts and choices, keep calm.

The current data is saved in the place, which is very convenient; the powerful waveform picture manager supports thumbnail browsing, viewing, detailed viewing, page turning, deletion and waveform zooming in, zooming out, moving, etc., to facilitate secondary analysis. The fuselage is equipped with a USB interface, which can be connected to a computer to share its screenshots with the computer, which is convenient for secondary analysis; The graphic display function can be used to determine the amplitude, frequency, and phase contrast of two groups of signals; Analysis of the harmonic components of the signal; built-in 6000mah high-quality lithium battery, which can last for 4 hours an a full charge, and can be used while charging like a notebook.

REMINDER

The bandwidth of the 1 X probe file is 5MHz, and the bandwidth of the 10X probe file is 100MHz. When measuring higher than 5MHz, you need to turn the switch an the probe handle to the 10X position, and the oscilloscope must be set to the 10X position. Otherwise the signal will be greatly attenuated, as is the case with all oscilloscopes.

Because the probe line of the oscilloscope itself has a capacitance of up to 100 ... 300pF, it is a very large capacitance for high-frequency signals! The signal has been greatly attenuated through the probe to the input of the oscilloscope, and the equivalent bandwidth is 5MHz. Therefore, in order to match the hundreds of pF of the probe line, the input of the probe line is attenuated by 10 times (the switch is in the 10X range). A few hundred pF capacitors are just used for impedance matching. At this time, the bandwidth is 100MHz. Note that only probes with a bandwidth of 100MHz or higher can be used.

ON-SCREEN INSTRUCTIONS

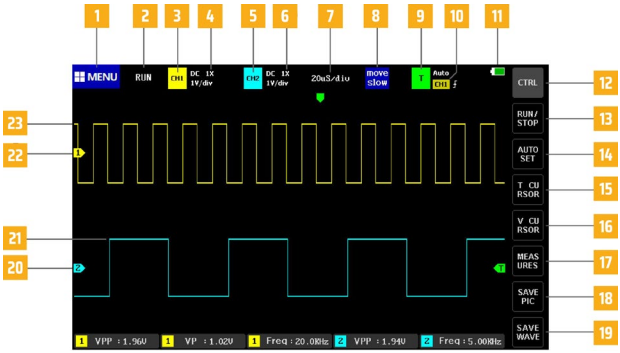

1 - Function menu button icon. Click here to pop up the function menu, which contains system setting options and saved screenshot waveforms and USB mode options.
2 - Run pause indication icon
3 - Channel 1 position indication means that the parameters near this block area are all parameters of Channel 1. Clicking this area will pop up the Channel 1 control bar
4 - Probe magnification of channel 1, divided into 1X, 10X, 100X three options
5 - Channel 2 position indication means that the parameters near this block area are the parameters of Channel 2. Clicking this area will pop up the Channel 2 control bar
6 - Probe magnification of channel 2, divided into 1X, 10X, 100X three options
7 - System time base refers to the length of time represented by a large grid in the horizontal direction, which is determined by the sampling rate. The larger the time base, the slower the sampling rate, and vice versa.
8 - The movement speed under the gesture movement operation. [Move coarse adjustment] means fast movement, [Move fine adjustment] means slow movement.
9 - Trigger indication icon, which means that the parameters near this block area are all trigger related parameters. Clicking this area will pop up the trigger control bar
10 - Trigger channel, divided into CH1, CH2 options
11 - Battery remaining power indicator icon, green block indicates remaining power
12 - Main interface control bar function switch button, dick this button to switch between 2 types of button bar
13 - Run pause button, dick this button to switch between running and pause
14 - One-button automatic adjustment button. Clicking this button will automatically identify the signal and set the system to the best parameters to display the waveform.
15 - Time cursor switch button, dick this button to turn the cursor measurement function on and off
16 - Voltage cursor switch button, dick this button to turn cursor measurement on and off
17 - Measurement parameter selection function. Click this button to pop up the parameter selection bar. Click the parameter in the selection bar to open the parame ter display.
18 - One-click screenshot button, dick this button to take a screenshot of the entire screen and automatically save it to the internal storage space
19 - One-click waveform save button. Clicking this button will save all waveform data of 2 channels to the internal storage space.
20 - The arrow indicating the baseline position of channel 2 is the position of 0V potential
21 - Waveform data of channel 2
22 - Channel 1 baseline position indicating arrow, which is the position of 0V potential
23 - Waveform data of channel 1

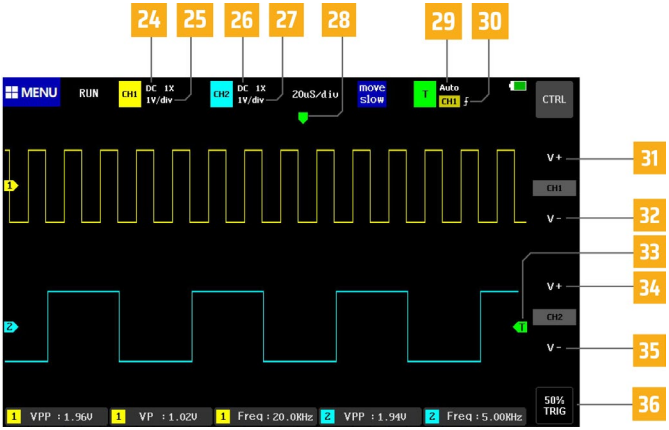

24 - Input coupling indicator icon of channel 1, there are two options of DC and AC, DC means DC coupling, AC means AC coupling

25 - The vertical sensitivity indicator of channel 1 refers to the voltage represented by a large division in the vertical direction.

26 - Input coupling indicator of channel 2. There are two options: DC and AC. DC means DC coupling and AC means AC coupling.

27 - The vertical sensitivity indicator of channel 2 refers to the voltage represented by a large grid in the vertical direction.

28 - Trigger X position indicating arrow, which refers to the trigger point here

29 - Trigger mode indication icon, divided into Auto, Single, Normal; Auto is automatic trigger, Sinle is single trigger, Normal is normal trigger

30 - Trigger edge indication icon, the arrow points up to the rising edge to trigger, the arrow points down to the falling edge to trigger

31 - Channel 1 vertical sensitivity increase button, that is, zoom in vertically. Clicking this button will zoom in the vertical direction, that is, stretch vertically.

32 - Channel 1 vertical sensitivity reduction button, that is, the vertical direction is reduced. Click this button to reduce the waveform in the vertical direction, that is, vertically.

33 - Trigger voltage indication icon, that is, the trigger threshold

34 - Channel 2 vertical sensitivity increase button, that is, zoom in vertically. Click this button to zoom in the vertical direction, that is, stretch vertically.

35 - Channel 2 vertical sensitivity reduction button, that is, the vertical direction is reduced. Clicking this button waveform will be reduced in the vertical direction, that is, vertically reduced.

36 - 50% trigger button refers to setting the trigger voltage to the middle position of the waveform amplitude. Note that it cannot be used for PWM waveforms with dead time. This type of waveform requires the trigger arrows to be set to both sides of the waveform.

CONTROL BAR TOUCH INDICATOR

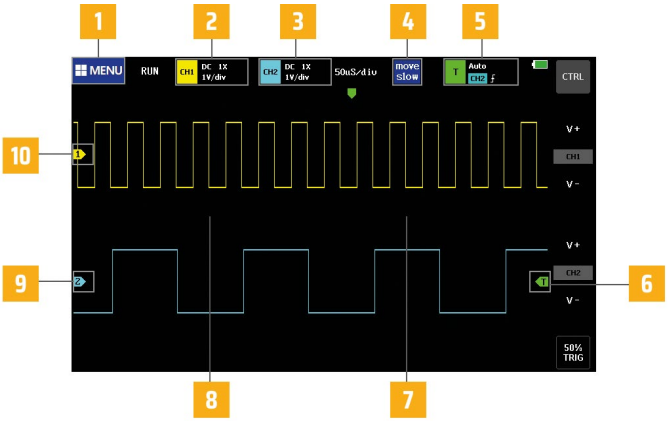

1 - System function menu key area, dick this area to pop up system function and setting menu
2 - Channel 1 control bar key area, click this area to pop up the parameter control bar of channel 1
3 - Channel 2 control bar key area, click this area to pop up the parameter control bar ofchannel 2
4 - Movement speed button area, click here to switch between fast movement and slow movement
5 - Trigger control bar key area, click here will pop up trigger parameter control bar
6 - Trigger voltage button area, press here and slide up and down to adjust the trigger voltage (trigger threshold)
7 - The time base shrinks the key area, that is, the waveform is stretched and enlarged in the horizontal direction. The display area to the right of the centerline of the background grid is the key area.
8 - The time base increases the key area, that is, the waveform is pushed horizontally to shrink. The area to the left of the centerline of the background grid is the key area.
9 - Channel 2 horizontal baseline button area. Press here and slide up and down to adjust the baseline position of Channel 2. You can also directly click the waveform to move the horizontal baseline (waveform moves up and down). The left and right movement buttons of the waveform are the entire display area.
10 - Channel 1 horizontal baseline button area. Press here and slide up and down to adjust the baseline position of channel 1. You can also directly click the waveform to move the horizontal baseline (waveform moves up and down). The left and right movement buttons of the waveform are the entire display area.

OPERATION INSTRUCTIONS

Turn channel 1 / channel 2 on or off: Click the yellow CH1 / CH2 control bar area in the upper left corner of the screen, the parameter control bar for channel 1 / channel 2 will pop up, and then click the [ON] position in the [open CH1]] column to enable the channel, and click the [OFF] position to close it.

Turn FFT on or off: Click the yellow CH1 / CH2 control bar area in the upper left corner of the screen, the parameter control bar for channel 1 / channel 2 will pop up, and then click the [ON] position in the [open FFT] column to enable the FFT of the channel. Click the [Close] position to turn off the FFT of this channel

Set the input coupling mode: Click the yellow CH1 / CH2 control bar area in the upper left corner of the screen, the parameter control bar for channel 1 / channel 2 will pop up, and then click the [DC] position in the [Coupling] column to set the channel input coupling to DC coupling, and click [AC] Position to set the channel input coupling to AC coupling

Set the probe input magnification: Click the yellow CH1 / CH2 control bar area in the upper left corner of the screen, the parameter control bar for channel 1 / channel 2 will pop up, and then click the [1X] position in the [probe mode] column to set the input magnification of the channel to 1X, Click [10X] to set the channel input magnification to 10X, click [100X] to set the channel input magnification to 100X

Enlarge the waveform: Click the right half of the waveform display area to zoom in horizontally (reduce the time base), click the [CTRL] button, set the key control bar to a column containing vertical zoom, and then click [V+] to zoom in.

Zoom out waveform: Click the left half of the waveform display area to zoom out horizontally (decrease the time base), click the [CTRL] button, set the button control bar to a column containing vertical zoom, and then click [V-] to zoom out.

Move waveform: Click the waveform curve line or the waveform area and then move to move the waveform in any direction

Adjust the trigger voltage: Click the green arrow area to the right of the display area and move it up or down to adjust the trigger voltage.

Set the trigger edge: Click the green T control bar area in the upper left corner of the screen, the trigger parameter control bar will pop up, and then click the [rising] position in the [trig mode] column to set the rising edge trigger, and click the [falling] position Can be set to trigger on falling edge

Set the automatic trigger: Click the green T control bar area in the upper left corner of the screen, the trigger parameter control bar will pop up, and then click the [auto] position in the [trig mode] bar toset the automatic trigger.

Set single trigger: Click the green T control bar area in the upper left corner of the screen, the trigger parameter control bar will pop up, and then click the [Single] position in the [trig mode] column to set it as a single trigger.

Set the general trigger: Click the green T control bar area in the upper left corner of the screen, and the trigger parameter control bar will pop up, and then click the [normal] position in the [trig mode] bar toset the normal trigger.

Pause display: Click the [RUN/STOP] button in the rightmost button bar of the screen to pause/ run the system. If you do not have this button, you need to press the [CTRL] button to switch to the button bar containing the button

Automatically adjust the waveform: Click the [AUTOSET] button on the right-most button bar to automatically adjust to the optimal setting according to the signal characteristics to display the waveform. If this button is not available, you need to press the [CTRL] button to switch to the button bar containing the button.

Set the slow sweep scroll mode: Click the left half of the waveform display area, and the time base will become larger. When the time base reaches 100mS, the system will enter the slow sweep scroll mode. 100mS - SOS belong to the scroll mode time base.

Cursor measurement: Click the [time cursor] button on the right-most button bar to manually measure the equivalent frequency of the time difference, and dick the [V CURSOR] button to manually measure the voltage. If this button is not available, you need to press the [CTRL] button to switch to the button bar containing the button.

Set the parameters to be displayed: Click the [MEASURS] button on the far right button bar to open the parameter control bar, and dick the parameter in the selection bar to open the parameter display. If this button is not available, you need to press the [CTRL] button to switch to the button bar containing the button.

Save the current screen display: Click the [SAVE PIC] button on the far right button bar to take a screenshot of the entire screen and automatically save it to the internal storage space. If this button is not available, you need to press the [CTRL] button to switch to the button bar containing the button.

Save the current waveform data: Click the [SAVE WAVE] button on the far right button bar to save all the waveform data of the opened channel to the internal storage space. If this button is not available, you need to press the [CTRL] button to switch to the button bar containing the button.

Adjust the screen brightness: Click the [MENU] button in the upper left corner of the screen to pop up 4 function control bars, and then dick the first [System Settings] to pop up 5 setting control bars, and then click [Screen Brightness] to adjust the screen display Brightness, 100 is the brightest and 0 is the darkest.

Adjust the background grid brightness: Click the [MENU] button in the upper left corner of the screen to pop up 4 function control bars, and then dick the first [System Settings] to pop up 5 setting control bars, and then dick [Grid Brightness]. Adjust the background grid brightness of the waveform display, 100 is the brightest, 0 is to turn off the grid display.

Settings are always triggered automatically at 50%: Click the [MENU] button in the upper left corner of the screen to pop up 4 function control bars, and then dick the first [System Settings] to pop up 5 setting control bars, and then dick [Always trigger 50%] Automatically set to 50% when it is green. In the automatic trigger mode after setting, the waveform of each measurement is half the peak voltage of the waveform.

Horizontal baseline offset calibration: When the probe has been pulled out, when the yellow / cyan indicator arrow and the yellow / cyan horizontal baseline on the left of any of the two channels are not in the same position, calibration is required. Click the [MENU] button in the upper left corner of the screen to pop up 4 function control bars, and then dick the first [System Settings] to pop up 5 setting control bars, and then dick [Baseline Calibration]. Vou need to unplug all the probes and USB Charge the power, make sure it is unplugged, and then dick [OK] to perform the calibration.

View the screenshot after saving: Click the [MENU] button in the upper left corner of the screen to pop up 4 function control bars, and then dick the second [Picture view] to enter the picture thumbnail preview interface, which contains the thumbnail of the waveform of the screenshot. Click the thumbnail to view the screenshot of the waveform in full screen. Clicking the bottom of the screen will pop up the control bar with the return, delete, previous, and next control buttons. You can also dick [Select All] or [Select] in the preview interface.

View saved waveform data: Click the [MENU] button in the upper left corner of the screen to pop up 4 function control bars, and then dick the third [Waveform View] to enter the waveform thumbnail preview interface, which contains thumbnails of the saved waveforms., Click the thumbnail to analyze the waveform in full screen, you can move and zoom the group of waveforms arbitrarily, you can also dick the cursor to measure manually, you can also dick the parameter control panel to reselect the parameters to be displayed, etc.] Refers to the previous set of waveforms, [page down] refers to the next set of waveforms.

Delete the saved waveform: In the full-screen view waveform interface, dick the [Delete Wave] button on the far right button bar to delete this group of waveforms. If this button is not available, you need to press the [CTRL] button to switch to the button bar containing the button.

Take a screenshot in the waveform browser: In the full-screen view of the waveform interface, dick the [SAVE PIC] button on the far right button bar to take a screenshot of the entire screen and automatically save it to the internal storage space. If this button is not available, you need to press the [CTRL] button to switch to the button bar containing the button.

Connect the computer to view the screenshot of the oscilloscope: Click the [MENU] button in the upper left corner of the screen to pop up 4 function control bars, and then dick the fourth [USB Connection] to enter the USB transmission interface. At this time, use the standard Android USB If the data cable is connected to the computer, the removable disk can be ejected. You can find the saved screenshot in the disk. Note that you cannot modify the file name of the image directly in the disk. Otherwise, the oscilloscope image manager cannot display the image.

ANALVSIS OF COMMON PROBLEMS

Why can't I turn on the phone after receiving it?
Answer: Maybe after the final test is completed, the tester forgets to shut down and puts it in the inventory until it runs out. After receiving the goods, it runs out of power. Please use USB for half an hour before powering on. Do not use computer USB for charging. Computer USB If the power is too low, you will be dissatisfied. Use the original charger.

Why is there no waveform in the test, and there is only one line on the screen?
Answer: Please check whether the pause has been pressed. If not, press the [Auto Adjust] button once. If not, it may be that the signal source does not have a signal output, or the probe wire is short-circuited or disconnected. Please check with a multimeter. Whether the probe and signal source are normal

Why is the voltage value data 0?
Answer: Please adjust the vertical sensitivity and time base (sampling rate), or press the [AUTOSET] screen to display at least a clear and complete periodic waveform, and the top and bottom of the waveform should be completely displayed on the screen, without cutting the top. Voltage data is correct.

Why is the frequency value data 0?
Answer: First of all, you need to make sure that the trigger mode is Auto. If it is still 0 in Auto mode, you need to press the [AUTOSET] button once. At least one clear and complete periodic waveform is displayed on the screen, and the waveform is to be triggered. (The green arrow indicates that the position is between the top and bottom of the waveform. It is fixed and does not shake.) The data of the frequency value is correct.

Why is the duty cycle 0?
Answer: First of all, you need to ensure that the trigger mode is Auto. If it is still 0 in Automode, the trigger may not be adjusted between the waveforms. After the trigger line is adjusted between the waveforms, the waveform will be fixed. The duty cycle data is correct after at least 1 clear periodic waveform is displayed.

Why are the AC coupled and DC coupled waveforms the same?
Answer: If the input signal is a symmetrical AC signal (signal output by the signal generator), the waveform is the same whether it is AC coupling or DC coupling. If it is an asymmetric AC signal or a DC pulsating signal, the waveform is only when the coupling is switched. Will move up and down

Why does the waveform jump up and down when I test the signal?
I can' t see any waveform but only see multiple lines jumping up and down?
Answer: Set the trigger mode to Auto, and then press the [AUTOSET] button once. If it is not resolved, the probe on the probe may not be grounded, or the probe end of the probe may be disconnected. Please use a multimeter to check whether the probe is normal.

Why does the waveform of the test shake from side to side and cannot be fixed?
Answer: You need to adjust the trigger voltage, that is, the green arrow on the right. Press and hold the green trigger arrow on the right and move it up and down. You need to adjust the green indicator arrow between the upper and lower waveforms. The waveform is triggered and fixed, or you enter the setting. Menu turns on Auto 50%.

Why can't I capture the sudden pulse waveform or digital logic signal?
Answer: Adjust the trigger mode to normal or single , and then adjust the trigger voltage, time base, and vertical sensitivity.

Why is there no waveform when measuring a battery or other DC voltage?
Answer: The battery voltage signal is a stable DC signal and has no curve waveform. In the DC coupling mode, and then adjust the vertical sensitivity, an upward or downward offset straight line waveform will appear. If it is AC coupling, no matter what No waveform adjustment

Why the charge is not full?
Answer: It may be using a laptop or USB charging below 2A. The USB output power of the laptop is too small to be dissatisfied. Replace it with an original SV2A charger and it will be full.

Why is the waveform of the 220V power frequency 50Hz AC very stiff?
Answer: The oscilloscope needs to display such low-frequency signals at 50Hz. The sampling rate needs to be very low to capture the 50Hz signal. The oscilloscope will wait when the sampling rate is low. Therefore, it behaves as a change card . All oscilloscopes in the world are measuring 50Hz signals. Change cards every time, not because the oscilloscope itself

Why is the peak-to-peak data of VPP below 600V instead of 220V or 310V when measuring the 220V waveform of the commercial power?
Answer: The mains 220V is a symmetrical AC signal. The positive peak voltage (maximum value) is + 310V and the negative peak voltage (minimum value) is -310V. Therefore, the peak-to-peak value is 620V. Click [Parameter Display] to enter the parameter control bar to open the effective value. At this time, the 220V voltage is often said. The effective value of the mains voltage fluctuates between 180 ~ 260V, so the peak-to-peak VPP is in the range of 507 ~ 733V.

Why is the measured mains 220V waveform not a standard sine wave and distorted?
Answer: The mains power grid is generally polluted and contains more high-order harmonic components. These harmonics will show a distorted sine when superim posed on a sine wave. This is a normal phenomenon. Generally, the mains waveform is distorted. Has nothing to do with the oscilloscope itself

Why is the position of the baseline (0V) and the left arrow (0V) on the screen different from each other when there is no signal input, and there is a large offset?
Answer: Click the [MENU] button in the upper left corner of the screen to pop up 4 function control bars, and then click the first [System Settings] to pop up 5 setting control bars, and then click [Baseline Calibration]. All probes need tobe pulled out first Charge with USB power, make sure it is unplugged, and then click [OK] to calibrate

Why the signal voltage above 5MHz is greatly attenuated, and the bandwidth is only 5MHz?
Answer: When measuring above 5MHz, you need toset the probe to the 10X position, and the oscilloscope must also be set to the 10X input mode, because the oscilloscope's probe line itself has a capacitance of up to 100 ~ 300pF, which is a high-frequency signal. Very large capacitor! The signal has been greatly attenuated through the probe to the input of the oscilloscope, and the equivalent bandwidth is 5MHz. Therefore, in order to match the hundreds of pF of the probe line, the input of the probe line is attenuated by 10 times (the switch is in the 10X range). A few hundred pF capacitors are just used for impedance matching. At this time, the bandwidth is 100MHz. Note that only 100MHz probes can be used.

Why does the green charging indicator keep off when the computer is on?
Answer: The green indicator light indicates that the charger is no longer supplying power. The charger will continue to supply power to the system when the device is powered on, so the green indicator light will always be on. When the battery icon in the upper right corner is fully green when the device is powered on, the battery is fully charged.

COMMON CIRCUIL TEST METHODS

Battery or DC voltage measurement
Gear selection: The battery voltage is generally below 40V, and other DC voltages are uncertain. You need to adjust the gear according to the actual situation. If it is lower than 40V, use the 1X gear, and if it is higher than 40V, use the 10X gear (the probe and oscilloscope are set to Same file)

- First set the oscilloscope to Auto trigger mode (default is Auto trigger mode after power on), Auto trigger mode is used to test the periodic signal (DC voltage is a periodic signal)
- The oscilloscope is set to the corresponding position (the default is 1X position after booting)
- The oscilloscope is set to DC coupling mode
- Plug in the probe, and turn the switch on the probe handle to the corresponding position
- Make sure the battery has power or DC voltage has voltage output
- Connect the probe clip to the battery negative or DC negative, and the probe to the battery or DC positive
- Press the [AUTOSET] button once, the DC signal is displayed, and then look at the average value parameter. Note that the battery voltage or other DC voltages are DC signals, there is no curve waveform, only a straight line with up and down offset., And the peak-to-peak and frequency of this signal are both 0

Crystal measurement
Gear selection: It is easy to stop the oscillation after the crystal meets the capacitor. The input capacitance of the 1X probe is up to 100 ~ 300pF, the 10X gear is about 10 ~ 30pF, and the 1X gear is easy to stop the vibration, so it needs to be set to the 10X gear, that is, Both the probe and the oscilloscope should be switched to the 10X position (the probe and the oscilloscope are both set to the 10X position)

- First set the oscilloscope to Auto trigger mode (default is Auto trigger mode after power on), Auto trigger mode is used to test the periodic signal (the crystal resonance sinusoidal signal belongs to the periodic signal)
- The oscilloscope is set to the 10X position (the default is 1X position after booting)
- The oscilloscope is set to AC coupling mode
- Plug in the probe and turn the switch on the probe handle to the 10X position
- Make sure the crystal motherboard is powered on and running
- Connect the probe clip to the ground of the crystal oscillator main board (the negative end of the power supply), pull out the probe cap, the needle tip inside, and touch the needle tip to one of the pins of the crystal
- Press the [AUTOSET] button once, the waveform of the crystal to be measured is displayed. If the waveform after the automatic adjustment is too small or too large, you can press [CTRL] to switch to the zoom button bar, press [V+] and [V-] Manually adjust the waveform size

PWM signal measurement of MOS tube or IGBT
Gear selection: The voltage of the PWM signal that directly drives the MOS tube or IGBT is generally within 10V ~ 20V, and the PWM pre-stage control signal is also generally within 3 ~ 20V. The 1X gear can test up to 40V, so the 1X gear is sufficient for testing the PWM signal. (The probe and oscilloscope are set to 1X).

- First set the oscilloscope to Auto trigger mode (default is Auto trigger mode afterpower on), Auto trigger mode is used to test the periodic signal (PWM belongs to periodic signal)
- The oscilloscope is set to the 1X position (the default is 1X position after booting)
- The oscilloscope is set to DC coupling mode
- Plug in the probe and turn the switch on the probe handle to the 1X position
- Make sure that the PWM motherboard has a PWM signal output at this time
- Connect the probe clip to the 5 pole of the MOS tube and the probe to the G pole of the MOS tube
- Press the [AUTOSET] button once, the measured PWM waveform is displayed. If the waveform after the automatic adjustment is too small or too large, you can press [CTRL] to switch to the zoom button bar, press [V+] and [V-] Manually adjust the waveform size

Signal generator output measurement
Gear selection: The output voltage of the signal generator is within 30V, and the maximum test of 1V is 40V, so it is sufficient to test the output of the signal generator with 1X (the probe and oscilloscope are set to 1X).

- First set the oscilloscope to Auto trigger mode (default is Auto trigger mode after power on), Auto trigger mode is used to test the periodic signal (the signal output by the signal generator belongs to the periodic signal)
- The oscilloscope is set to the 1X position (the default is 1X position after booting)
- The oscilloscope is set to DC coupling mode
- Plug in the probe and turn the switch on the probe handle to the 1X position
- Make sure the signal generator is turned on and outputting signals
- Connect the probe clip to the black clip of the signal generator output cable, and connect the probe to the red output cable of the signal generator
- Press the [AUTOSET] button once, and the waveform output by the generator is displayed. If the waveform after the automatic adjustment is too small or too large, you can press [CTRL] to switch to the zoom button bar, press [V+] and [V-] Manually adjust the waveform size

220V or 110V household mains measurement
Gear selection: household electricity is generally 180 ~ 260V, peak-to-peak voltage is 507 ~ 733V, 1X file can measure up to 40V, 10X file can measure up to 400V, 100X file can measure up to 4000V, the default standard probe is 10X high voltage probe, the highest can only be Measure 400V peak-to-peak, so you need to prepare your own 100X probe, and then set it to 100X, that is, the probe and oscilloscope must be switched to 100X.

- First set the oscilloscope to Auto trigger mode (default is Auto trigger mode after power on), Auto trigger mode is used to test the periodic signal (50Hz of household electricity is a periodic signal)
- The oscilloscope is set to the 100X position (the default is 1X position after booting)
- The oscilloscope is set to AC coupling mode
- Plug in the probe and turn the switch on the probe handle to the 100X position
- Ensure that the tested end has household electrical output
- Connect the probe clip and the probe to the 2 wires of household electricity, without distinguishing the positive and negative poles.
- Press the [AUTOSET] button once, and the waveform of household electricity is displayed. If the waveform after the automatic adjustment is too small or too large, you can press [CTRL] to switch to the zoom button bar, press [V+] and [V-] Manually adjust the waveform size

Power ripple measurement
Gear selection: If the output voltage of the power supply is below 40V, set it to 1X (the probe and oscilloscope are set to 1X), if it is 40 - 400V, you need to set to 10X (the probe and oscilloscope are set to the same file))

- First set the oscilloscope to Auto trigger mode (default is Auto trigger mode after power on), Auto trigger mode is used to test the periodic signal (DC voltage is a periodic signal)
- The oscilloscope is set to the corresponding position (the default is 1X position after booting)
- The oscilloscope is set to the AC coupling mode. Note that the AC coupling mode is AC.
- Plug in the probe, and turn the switch on the probe handle to the corresponding position
- Make sure the power is on and there is voltage output
- Connect the probe clip to the negative terminal of the power output, connect the probe to the positive terminal of the power output, and wait for about 3 seconds. End the waiting when the yellow line is flush with the left yellow arrow
- Press the [AUTOSET] button once, and the power ripple is displayed.

Inverter output measurement
Gear selection: The inverter output voltage is similar to that of household electricity. The peak-to-peak voltage is above 500V. The 1X file can measure up to 40V, the 10X file can measure up to 400V, and the 100X file can measure up to 4000V. The default standard probe is 10X high voltage probe. It can only measure 400V peak-to-peak value, so you need to prepare your own 100X probe, and then set it to the 100X position, that is, the probe and the oscilloscope must be switched to the 100X position.

- First set the oscilloscope to Auto trigger mode (default is Auto trigger mode after power on), Auto trigger mode is used to test the periodic signal (the signal output by the inverter belongs to the periodic signal)
- The oscilloscope is set to the 100X position (the default is 1X position after booting)
- The oscilloscope is set to DC coupling mode
- Plug in the probe and turn the switch on the probe handle to the 100X position
- Make sure the inverter is powered on and has voltage output
- Connect the probe clip and probe to the output of the inverter without distinguish ing between positive and negative poles
- Press the [AUTOSET] button once, the waveform of the inverter is displayed. If the waveform after the automatic adjustment is too small or too large, you can press [CTRL] to switch to the zoom button bar, press [V+] and [V-] Manually adjust the waveform size

Amplifier or audio signal measurement
Gear selection: The output voltage of the power amplifier is generally below 40V, and the 1X gear can test up to 40V, so the 1X gear is sufficient (the probe and oscilloscope are set to 1X gear).

- First set the oscilloscope to Auto trigger mode (default is Auto trigger mode after power on)
- The oscilloscope is set to the 1X position (the default is 1X position after booting)
- The oscilloscope is set to AC coupling mode
- Plug in the probe and turn the switch on the probe handle to the 1X position
- Make sure the amplifier is turned on and is outputting audio signals
- Connect the probe clip and the probe to the two wire output ends of the amplifier without distinguishing the positive and negative poles.
- Press the [AUTOSET] button once, the waveform of the inverter is displayed. If the waveform after the automatic adjustment is too small or too large, you can press [CTRL] to switch to the zoom button bar, press [V+] and [V-] Manually adjust the waveform size

Automotive communication signal / bus signal measurement
Gear selection: Automotive communication signals are generally lower than 20V, and 1X gear can test up to 40V, so it is sufficient to test automotive communication signal signals with 1X gear (the probe and oscilloscope are set to 1X gear).

- First set the oscilloscope to the Normal trigger mode (the default is the Auto trigger mode after power on). The Normal trigger mode is specially used to measure non-pe riodic digital signals. If you use the Auto trigger mode, you cannot catch non-periodic signals
- The oscilloscope is set to the 1X position (the default is 1X position after booting)
- The oscilloscope is set to AC coupling mode
- Plug in the probe and turn the switch on the probe handle to the 1X position
- Connect the probe clip and probe to two signal lines of the communication line, regardless of the positive and negative. If there are multiple signal lines, you need to determine the signal line yourself in advance, or try to select two of them multiple times. Line to test
- Make sure there are communication signals on the communication line at this time
- Adjust the vertical sensitivity to 50mV
- Time base is adjusted to 20uS
- Press the [50% TRIG] button once
- When there is a communication signal on the communication line, the oscillo scope will capture and display it on the screen. If it cannot capture, you need to try to adjust the time base (1mS ~ 100nS) and trigger voltage (green arrow).

Infrared remote receiver measurement
Gear selection: The infrared remote control signal is generally 3 ~ 5V, and the 1X gear can test up to 40V, so it is sufficient to test the car communication signal signal with 1X gear (the probe and oscilloscope are set to 1X gear).

- First set the oscilloscope to Normal trigger mode (default is Auto trigger mode after power on). Normal trigger mode is specially used for measuring non-periodic digital signals. If you cannot catch non-periodic signals with Auto trigger mode, infrared remote control signals Aperiodic digitally encoded signal
- The oscilloscope is set to the 1X position (the default is 1X position after booting)
- The oscilloscope is set to DC coupling mode
- Plug in the probe and turn the switch on the probe handle to the 1X position
- Connect the probe clip to the ground (negative pole) of the infrared receiver main board, and connect the probe to the data pin of the infrared receiver.
- Adjust the vertical sensitivity to 500mV
- Time base is adjusted to 20u5
- Adjust the trigger red arrow position to the left yellow arrow position about 1 large grid distance
- At this time, send a signal to the infrared receiver by remote control, and a waveform will appear on the oscilloscope.

Amplifier circuit measurement with sensors (temperature, humidity, pressure, Hall, etc.)
Gear selection: The sensor signal is generally weak, about a few millivolts. This small signal cannot be detected directly by an oscilloscope. There is a signal amplification part on the sensor motherboard. Find the output of this amplifier and the oscillo scope can measure This amplified signal can be set in 1X position (the probe and oscilloscope are set to 1X position)

- First set the oscilloscope to Auto trigger mode (default is Auto trigger mode after power on)
- The oscilloscope is set to the 1X position (the default is 1X position after booting)
- The oscilloscope is set to DC coupling mode
- Plug in the probe and turn the switch on the probe handle to the 1X position
- Connect the probe clip to the ground of the sensor motherboard (negative power supply), find the output of the amplified part, and connect the probe to this output
- Adjust the vertical sensitivity to 50mV
- The time base is adjusted to 500mS to enter the large time base slow sweep mode
- Move the baseline to the bottom position
- If the signal line appears at the top, you need to reduce the vertical sensitivity, when the updated signal on the right side does not start at the top , then you can start Detect the signal received by this sensor

DISPOSAL

For the disposal of batteries in the EU, the (EU) 2023/1542 directive of the European Parliament applies. Due to the contained pollutants, batteries must not be disposed of as household waste. They must be given to collection points designed for that purpose. In order to comply with the EU directive 2012/19/EU we take our devices back. We either re-use them or give them to a recycling company which disposes of the devices in line with law. For countries outside the EU, batteries and devices should be disposed of in accordance with your local waste regulations. If you have any questions, please contact PCE Instruments.

PCE INSTRUMENTS CONTACT INFORMATION

Germany
PCE Deutschland GmbH
Im Langel 26
D-59872 Meschede
Deutschland
Tel.: +49 (0) 2903 976 99 0
Fax: +49 (0) 2903 976 99 29
info@pce-instruments.com
www.pce-instruments.com/deutsch

France
PCE Instruments France EURL
2, rue Georges Kuhnmunch
67250 Soultz-sous-Forêts
France
Tel.: +33 (0) 972 35 37 17
Fax.: +33 (0) 972 35 37 18
info@pce-france.fr
www.pce-instruments.com/french

Spain
PCE Ibérica S.L.
Calle Mula, 8
02500 Tobarra (Albacete)
España
Tel. : +34 967 543 548
info@pce-iberica.es
www.pce-instruments.com/espanol

United Kingdom
PCE Instruments UK Ltd
Trafford House
Chester Rd, Old Trafford
Manchester M32 0RS
United Kingdom
Tel: +44 (0) 161 464902 0
Fax: +44 (0) 161 464902 9
info@pce-instruments.co.uk
www.pce-instruments.com/english

Italy
PCE Italia s.r.l.
Via Pesciatina 878 / B-Interno 6
55010 Loc. Gragnano
Capannori (Lucca)
Italia
Telefono: +39 0583 975 114
Fax: +39 0583 974 824
info@pce-italia.it
www.pce-instruments.com/italiano

Turkey
PCE Teknik Cihazları Ltd.Şti.
Halkalı Merkez Mah.
Pehlivan Sok. No.6/C
34303 Küçükçekmece - İstanbul
Türkiye
Tel: 0212 471 11 47
Faks: 0212 705 53 93
info@pce-cihazlari.com.tr
www.pce-instruments.com/turkish

The Netherlands
PCE Brookhuis B.V.
Twentepoort West 17
7609 RD Almelo
Nederland
Telefoon: +31 (0)53 737 01 92
info@pcebenelux.nl
www.pce-instruments.com/dutch

United States of America
PCE Americas Inc.
1201 Jupiter Park Drive, Suite 8
Jupiter / Palm Beach
33458 FL
USA
Tel: +1 (561) 320-9162
Fax: +1 (561) 320-9176
info@pce-americas.com
www.pce-instruments.com/us

Denmark
PCE Instruments Denmark ApS
Birk Centerpark 40
7400 Herning
Denmark
Tel.: +45 70 30 53 08
kontakt@pce-instruments.com
www.pce-instruments.com/dansk

Subject to change without notice