DATASHEET

Pushbutton switch

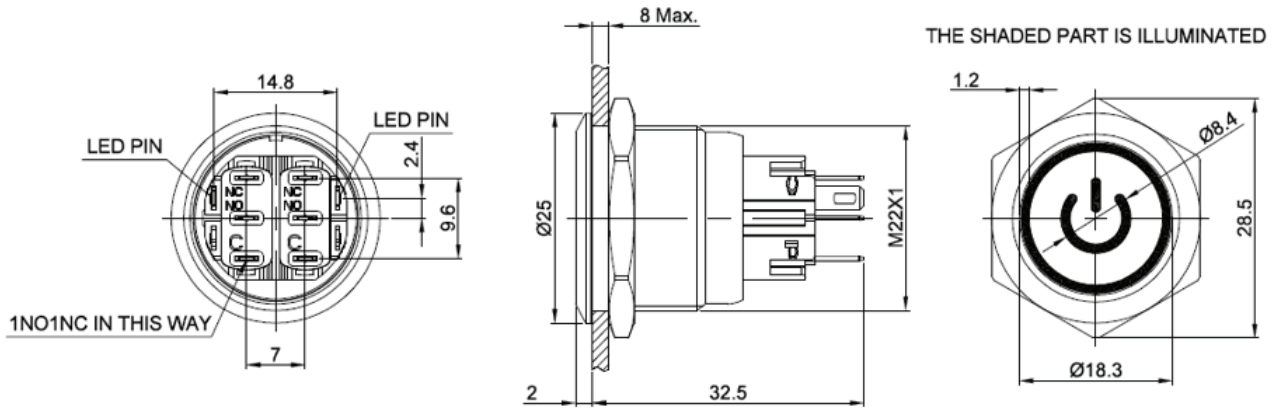

All dimensions in mm

8MAX: means the panel thickness, the max thickness for the panel no more than 8mm.

Technical data

Switch rating 3A/250VAC
Mounting diameter ..... 22 mm
Head shape ..... Round flat head
Operation type ..... 1NO1NC / 2NO2NC
Illumination type ..... Ring and power illumination
Illumination voltage ..... 12 V
Terminal ..... Pin terminal (2.8 x 0.5mm)
Operating and storage temperature ..... -25 to +55 °C
Operating and storage humidity ..... 45 - 85 % RH
Material ..... Stainless steel
Mechanical life ..... 1,000,000 (momentary) / 500,000 (latching)
Electrical life ..... 50,000 cycles
Dielectric strength ..... 1,500V, RMS 50Hz, 1min.
IP degree IP65

Item no.	Function	Operation type	LED color
3734963	Momentary	1NO1NC	Red
3734964	Momentary	1NO1NC	Green
3734966	Momentary	1NO1NC	Blue
3734965	Momentary	1NO1NC	White
3734968	Latching	1NO1NC	Red
3734967	Latching	1NO1NC	Green
3734971	Latching	1NO1NC	Blue
3734972	Latching	1NO1NC	White
3734969	Momentary	2NO2NC	Red

This is a publication by Conrad Electronic SE, Klaus-Conrad-Str. 1, D-92242 Hirschau (www.conrad.com). All rights including translation reserved. Reproduction by any method, e.g. photocopy, microfilming, or the capture in electronic data processing systems require the prior written approval by the editor. Reprinting, also in part, is prohibited. This publication represents the technical status at the time of printing.

Copyright 2026 by Conrad Electronic SE.

3734973	Momentary	2NO2NC	Green
3734970	Momentary	2NO2NC	Blue
3734974	Momentary	2NO2NC	White
3734975	Latching	2NO2NC	Red
3734977	Latching	2NO2NC	Green
3734976	Latching	2NO2NC	Blue
3734978	Latching	2NO2NC	White