DATASHEET

Pushbutton switch

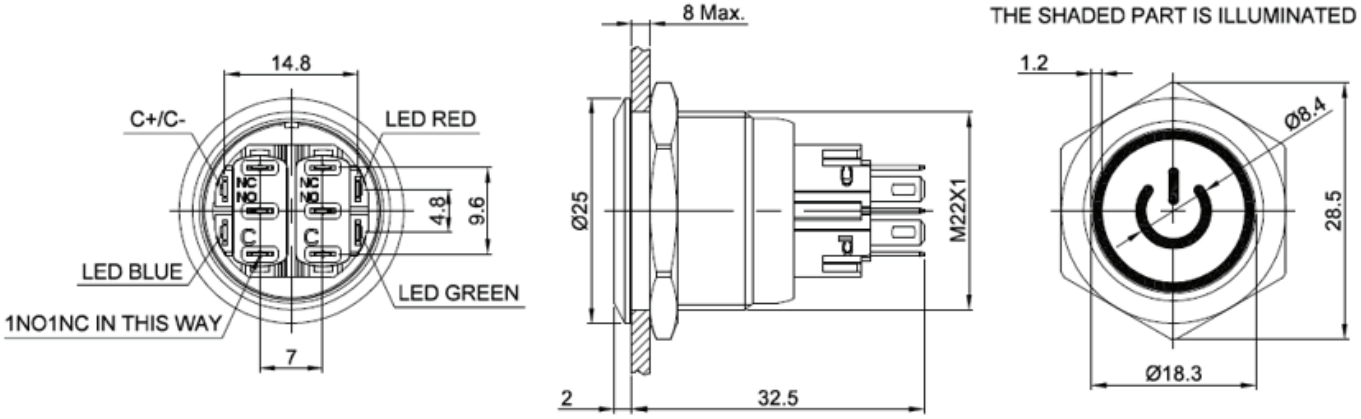

8MAX: means the panel thickness, the max thickness for the panel no more than 8mm.

All dimensions in mm

8MAX: means the panel thickness, the max thickness for the panel no more than 8 mm.

Technical data

Switch rating ..... 3 A/250 V/AC
Mounting diameter ..... 22 mm
Head shape ..... Round flat head
Operation type ..... 1NO1NC / 2NO2NC
Illumination type ..... Ring and power illumination
Illumination color ..... RGB (common cathode)
Illumination voltage ..... 12 V
Terminal ..... Pin terminal (2.8X0.5mm)
Operating and storage temperature ..... -25 to +55 °C
Operating and storage humidity ..... 45 - 85 % RH
Material ..... Stainless steel
Mechanical life ..... 1,000,000 (momentary) / 500,000(latching)
Electrical life ..... 50,000 cycles
Dielectric strength ..... 1,500V, RMS 50Hz, 1min.
IP degree IP65

Item no.	Function	Operation type
3734979	Momentary	1NO1NC
3734980	Latching	1NO1NC
3734981	Momentary	2NO2NC
3734982	Latching	2NO2NC

This is a publication by Conrad Electronic SE, Klaus-Conrad-Str. 1, D-92242 Hirschau (www.conrad.com). All rights including translation reserved. Reproduction by any method, e.g. photocopy, microfilming, or the capture in electronic data processing systems require the prior written approval by the editor. Reprinting, also in part, is prohibited. This publication represents the technical status at the time of printing.

Copyright 2026 by Conrad Electronic SE.