DATASHEET

Pushbutton switch

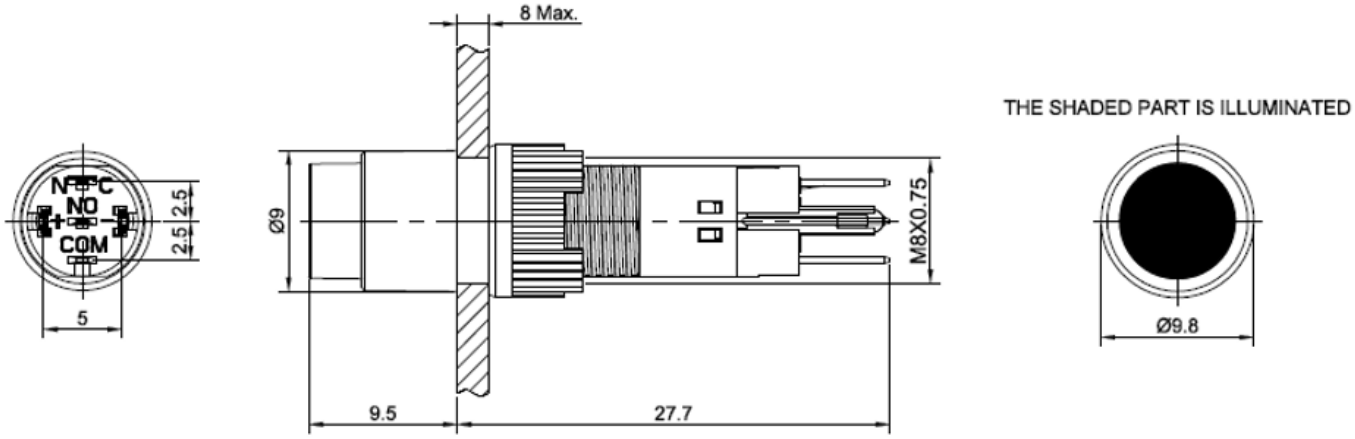

All dimensions in mm

8MAX: means the panel thickness, the max thickness for the panel no more than 8 mm.

Technical data

Mounting diameter ..... 8 mm
Head shape ..... round head
Operation type ..... Momentary / Latching
Contact structure 1NO1NC
Switch rating ..... 0.5 A / 250 V/AC
Terminal ..... Pin terminal
Operating and storage temperature ..... -25 to +55 °C
Operating and storage humidity ..... max. 85 % RH
IP rating IP40

Item no.	Function	LED color	LED voltage
3735001	Momentary	Red	12V
3735002	Momentary	Green	12V
3735004	Momentary	Blue	12V
3735003	Latching	Red	12V
3735006	Latching	Green	12V
3735005	Latching	Blue	12V

This is a publication by Conrad Electronic SE, Klaus-Conrad-Str. 1, D-92242 Hirschau (www.conrad.com). All rights including translation reserved. Reproduction by any method, e.g. photocopy, microfilming, or the capture in electronic data processing systems require the prior written approval by the editor. Reprinting, also in part, is prohibited. This publication represents the technical status at the time of printing.

Copyright 2026 by Conrad Electronic SE.