BU-4150059XXX

(Cable Assembly Coaxial SMA Straight to N-type Straight Male to Male RG-58)



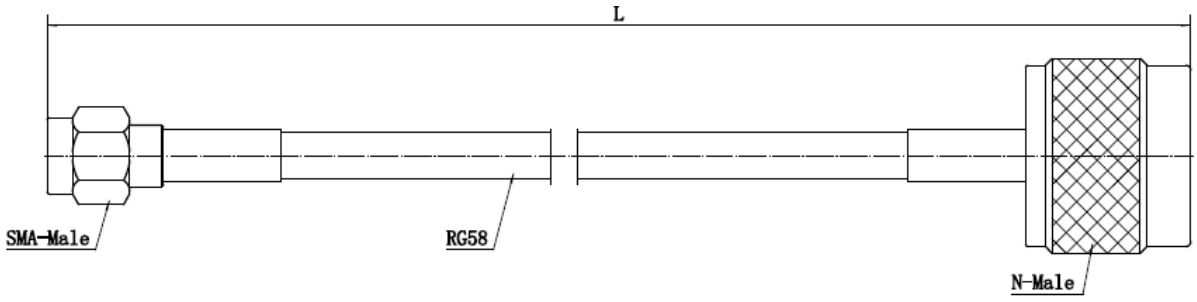

Mueller Electric Company
2850 Gilchrist Rd. Bld 5A
Akron, OH 44305

www.muellerelectric.com

Toll Free: 800.955.2629
Phone: 330.780.2525
Fax: 330.780.2524

Electrical Ratings

Electrical ratings of a cable assembly are determined by the limiting connector type and cable size.

Connector	Cable	Connector Impedance (Ohms)	Frequency (GHz)	VSWR	Working Voltage (At Sea Level)
SMA, N Type	RG-58	50	DC-3	1.2 MAX	335V

Product Attributes

Gender	Male to Male
Style	SMA to N Type
1st Connector	Gold Plated SMA Male Plug Straight
2nd Connector	Nickel Plated N-type Male Plug Straight
Features	Shielded
Operating Temperature	-65°C (-85°F) to 150°C (302°F)
BU-4150059012 BU-4150059024 BU-4150059036 BU-4150059048 BU-4150059060 BU-4150059M1.5 BU-4150059MM250 BU-4150059MM500 BU-4150059MM750	12" (304.8 mm) 24" (609.6 mm) 36” (914.4 mm) 48” (1219.2 mm) 60” (1524 mm) 1.5M (59.1”) 250mm (9.8”) 500mm (19.7”) 750mm (29.5”)
RoHS 3 Compliant	

Mueller Electric Company
2850 Gilchrist Rd. Bld 5A
Akron, OH 44305

www.muellerelectric.com

Toll Free: 800.955.2629
Phone: 330.780.2525
Fax: 330.780.2524