DATASHEET

Push-in Terminal Connector, 40 pcs/pk

Item no.: 3787693

Item no.: 3787700

Overview

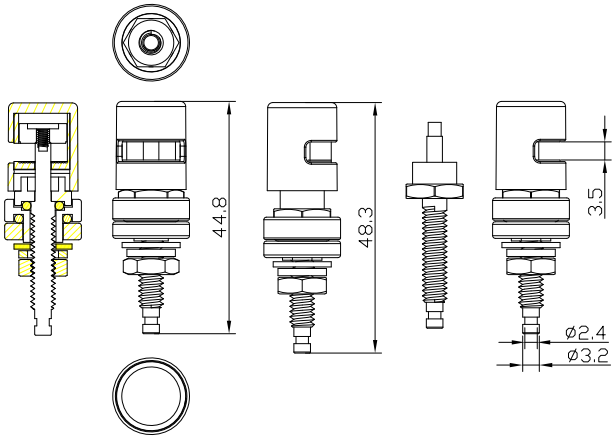

All dimensions in mm

Feature

- 20 A 4mm insulated plug
- CAT II 1000 V / CAT III 600 V

Technical data

Overvoltage category	CAT II 1000 V / CAT III 600 V
Nominal voltage	1000 V
Rated current	20 A (max. 32 A)
Connector	Stackable 4 mm insulated plug
Contact material	Nickel plated copper
Material of insulation	PA
Colour	Item no.: 3787693 Red Item no.: 3787700 Black
Operating conditions	-5 to +45 °C, <85% RH
Storage conditions	-10 to +50 °C, <85% RH
Dimensions (L x Ø)	48.3 x 12 mm
Weight	8 g per pc
Package	40 pcs/pk

This is a publication by Conrad Electronic SE, Klaus-Conrad-Str. 1, D-92242 Hirschau (www.conrad.com). All rights including translation reserved. Reproduction by any method, e.g. photocopy, microfilming, or the capture in electronic data processing systems require the prior written approval by the editor. Reprinting, also in part, is prohibited. This publication represents the technical status at the time of printing.

Copyright 2026 by Conrad Electronic SE.