Electronic Circuit Breaker
4 x 24 - 12 V, 3.75 - 5 A

- 4 current controlled output channels
- Adaptive voltage-dependent tripping current for maximal output power according to NEC Class 2
- Selective tripping of overloaded output channels
- Compatible even with large capacitive loads
- 24 V and 12 V operation
- Width only 22.5 mm
- Protection function in case of PSU overload
- Local control and reset via push buttons
- Configurable signaling and communication interface
- ON/OFF feature for each individual output channel
- Easy wiring via push-in terminals
- 3 year warranty

Product Description

The PISA-M devices are miniature 4-channel protection modules for 24 V and 12 V systems providing all benefits of electronic circuit breakers in a tiny DIN rail mountable housing: Voltage-dependent tripping current for 4 independent output channels in one device – including selection of tripping characteristic combined with different options for remote signaling and communication, enabling remote configuration, monitoring and control.

The PISA-M supports multiple, user-selectable, signaling and communication methods, allowing the selection of simple alerts and reset function.

All PISA-M devices are equipped with push-in terminals, which are optimised for automated wiring and allow fast and safe installation.

Short-form Data

Input voltage	DC 24 V DC 12 V	- 20 % / + 25 % - 20 % / + 25 %
Input current	max. 20 A	
Internal consumption	30 mA at 24 V 20 mA at 12 V	
Output tripping current per channel	3.75 A at 24 V 4.85 A at 12 V	automatic adjustment between 3 A and 4.85 A acc. to the input voltage
Tripping characteristics	slow or fast	selectable
Tripping delay	< 2 ms 0.22 s	at short circuit for fast tripping at 1.5 x tripping current
	< 10 ms 1.1 s	at short circuit for slow tripping at 1.5 x tripping current
Max. capacitive load per channel	45 mF	at 3.75 A, 24 V resistive load, slow tripping characteristic
Efficiency	> 99 % at 24 V > 98 % at 12 V	
Signaling and Communication	Output channel status Remote output channel reset Digital Coded Interface	
Temperature range	-25 °C to +70 °C	
Size (w x h x d)	22.5 x 104 x 98 mm	without DIN rail
Weight	100 g	without accessories

Order Numbers

Electronic Circuit Breaker

PISA-M-4CL2	4 NEC Class 2 output channels

Accessory

ZM3.Wall	Wall mounting bracket

Main Approvals

For details and the complete approval list, see chapter 22.

c UL us LISTED

UL 61010-2-201

All parameters are specified at 24 Vdc, 4 x 3.75 A, +25 °C ambient temperature and a 5 minutes run-in time unless otherwise noted.

Index

	Page
1. Intended Use	3
2. Installation Instructions	3
3. Typical Wiring Scheme	4
4. DC Input	5
5. DC Output	6
6. Tripping Characteristics	7
7. Charging of Capacitive Loads	8
8. Fail-Safe Master Switch	9
9. Power Supply Overload Protection	9
10. Device Overcurrent Protection	10
11. Signal Status Output and Control Input	10
12. Functional Diagram	11
13. Terminals and Wiring	12
14. Front Side and User Elements	13
15. PISA-M Local User Interface: Access Data and Set Configuration	14
16. Digital Coded Interface	14
17. Lifetime Expectancy	16
18. MTBF	16
19. EMC	17
20. Environment	18
21. Safety and Protection Features	19
22. Approved, Fulfilled or Tested Standards	20
23. Regulatory Product Compliance	20
24. Physical Dimensions and Weight	21
25. Accessory	22
25.1. ZM3.Wall mounting bracket	22

The information given in this document is correct to the best of our knowledge and experience at the time of publication.

If not expressly agreed otherwise, this information does not represent a warranty in the legal sense of the word. As the state of our knowledge and experience is constantly changing, the information in this data sheet is subject to revision. We therefore kindly ask you to always use the latest issue of this document (available under www.pulspower.com).

No part of this document may be reproduced or utilised in any form without our prior permission in writing.

Packaging and packaging aids can and should always be recycled. The product itself may not be disposed of as domestic refuse.

Terminology and Abreviations

t.b.d.	To be defined, value or description will follow later.
DC 24 V	A figure displayed with the AC or DC before the value represents a nominal voltage with standard tolerances (usually ± 15 %) included.
24 Vdc	A figure with the unit (Vdc) at the end is a momentary figure without any additional tolerances included.
may	A key word indicating flexibility of choice with no implied preference.
shall	A key word indicating a mandatory requirement.
should	A key word indicating flexibility of choice with a strongly preferred implementation.

All parameters are specified at 24 Vdc, 4 x 3.75 A, +25 °C ambient temperature and a 5 minutes run-in time unless otherwise noted.

1. Intended Use

This device is designed for installation in an enclosure and is intended for commercial use, such as in industrial control, process control, monitoring and measurement equipment or the like. Do not use this device in equipment, where malfunctioning may cause severe personal injury or threaten human life without additional appropriate safety devices, that are suited for the end-application.
If this device is used in a manner outside of its specification, the protection provided by the device may be impaired.

2. Installation Instructions

Obey the following installation instructions:

This device may only be installed and put into operation by qualified personnel. This device does not contain serviceable parts. If damage or malfunction should occur during installation or operation, immediately turn power off and send unit to the factory for inspection.

Install the device in an enclosure providing protection against electrical, mechanical and fire hazards. Install the device onto a DIN rail according to EN 60715 with the input terminals on top of the unit.

Use an appropriately sized 24 V or 12 V power supply, which can deliver the peak current required to trip the load output channels. If peak currents are too low, the PISA-M will trip output channels in case of voltage drops to protect the power supply from overload.

Make sure that the wiring is correct by following all local and national codes. Use appropriate copper cables that are designed for a minimum operating temperature of +60 °C for ambient temperatures up to +45 °C, +75 °C for ambient temperatures up to +60 °C and +90 °C for ambient temperatures up to +70 °C. Ensure that all strands of a stranded wire enter the terminal connection.

The device is designed for pollution degree 2 areas in controlled environments. No condensation or frost is allowed. The enclosure of the device provides a degree of ingress protection of IP20. The housing does not provide protection against spilled liquids.

The isolation of the devices is designed to withstand impulse voltages up to 1.5 kV according to IEC 60664-1.

The input can be powered from a regulated power supply or a similar DC source.

The input must be powered from a PELV or SELV source in order to maintain a SELV or PELV output. Check for correct input polarity. The device will not operate when the voltage is reversed.

A disconnecting means shall be provided for the input of the device.

The device is designed as “Class of Protection III” equipment according to IEC 61140.

The device is designed for convection cooling and does not require an external fan. Do not obstruct airflow and do not cover ventilation grid!

Keep the following minimum installation clearances: 40 mm on top, 30 mm on the bottom, 0 mm left and right side. Increase the 0 mm to 15 mm in case the adjacent device is a heat source. Between multiple PISA-M modules no clearance is needed. The device is designed for altitudes up to 5000 m.

The maximum surrounding air temperature is +70 °C. The operational temperature is the same as the ambient or surrounding air temperature and is defined 3 cm below the device. The device is designed to operate in areas between 5 % and 95 % relative humidity.

3. Typical Wiring Scheme

One PISA-M device is suitable to distribute the current to 4 consumers.

The (+) pole terminals of the loads must be connected to the output channels of the PISA-M module.

For distribution of the (-) pole, an external distribution node is required.

If several PISA-M modules are connected to a power supply with nominal current exceeding 20 A, the (-) pole of the power supply shall be connected directly to the distribution node. The (-) pole of the PISA-M is used for the supply of PISA-M only.

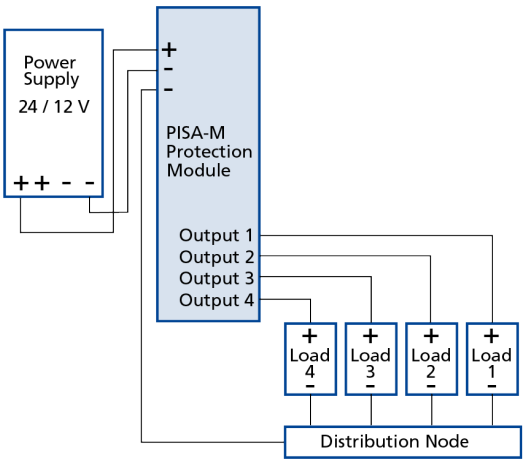

Fig. 3-1: **Standard wiring scheme**

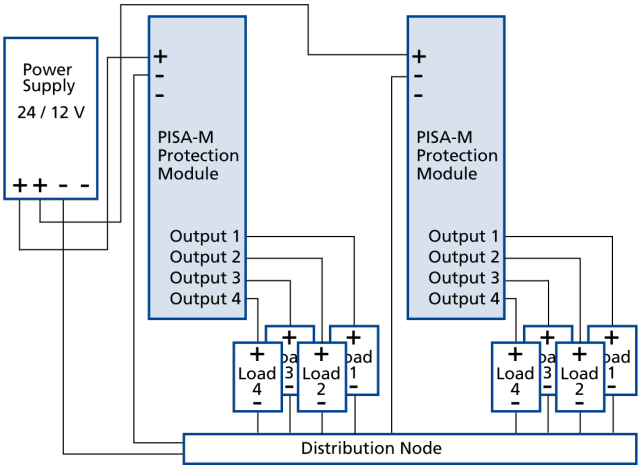

Fig. 3-2: **Wiring scheme for multiple PISA-M modules connected to one power supply with nominal output current > 20 A**

4. DC Input

The input can be powered from a regulated power supply or a similar DC source.

The input must be powered from a PELV or SELV source or an “Isolated Secondary Circuit” in order to maintain SELV or PELV outputs.

Check for correct input polarity. The device will not operate when the voltage is reversed.

Use an appropriately sized power supply, which can deliver the required output current.

Input voltage	nom.	DC 24 V DC 12 V	- 20 % / + 25 % - 20 % / + 25 %
Input voltage ranges		19.2 - 30 Vdc 9.6 - 15 Vdc 15 - 19.2 Vdc	at DC 24 V at DC 12 V power supply protection deactivated
Turn-on voltage	typ.	9.6 Vdc	Required input voltage for turning-on the output channels.
Turn-off voltage	typ.	8.8 Vdc	
Input current	max.	15 A at 24 Vdc 20 A at 12 Vdc	The input current corresponds to the sum output current and the internal current consumption.
Internal current consumption	typ.	30 mA at DC 24 V 20 mA at DC 12 V	

All parameters are specified at 24 Vdc, 4 x 3.75 A, +25 °C ambient temperature and a 5 minutes run-in time unless otherwise noted.

5. DC Output

Output voltage	nom.	DC 24 V / 12 V	The output voltage is equal to the input voltage minus the voltage drop of the module.
Voltage drop per channel	typ.	70 mV at 3.75 A	if one output channel is loaded and all other channels are not connected to a load
	typ.	100 mV	if all output channels are loaded with 3.75 A
Sum current for all channels	max.	15 A / 20 A	
Output tripping current per channel	typ. typ.	3.75 A at 24 V 4.85 A at 12 V	Automatic adjustment between 30 V (3 A) and 12 V (4.85 A), see Fig. 5-2
Output current limitation	typ.	50 A	for all channels
Load capacitance capability	max.	45 mF	at 3.75 A, 24 V resistive load, slow tripping characteristic
Turn-on delay of output channels	max. typ. typ.	400 ms 350 ms 100 ms	until all output channels turned on after power-on until all output channels turned on after power-on delay between output channels
Back-feeding voltage	max.	30 V	Do not apply voltages > 30 V.

To prevent excessive peak currents on the 24 V or 12 V supply during power up the consumers, the output channels are activated sequentially with delayed intervals. CH1 activates 50 ms after applying the supply voltage. CH2 – CH4 will follow with a 100 ms delay for each, see Fig 5-1.

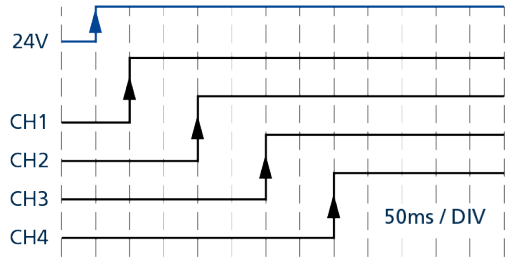

Fig. 5-1: **Turn-on sequence after applying supply voltage**

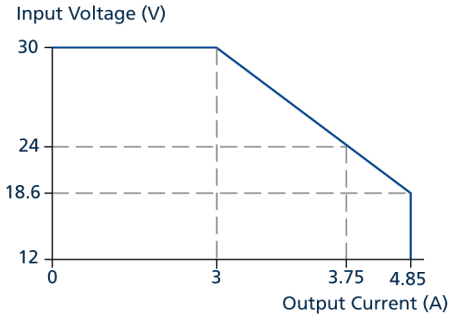

Fig. 5-2: **Output current vs. input voltage**

Output channels can be switched on and off independently by pushing the Channel Control Button or remotely. The status of each output channel is shown via the associated LED. Factory setting: All output channels are switched on.

Please consider the following information:

- Do not parallel output channels for higher output currents.
- Do not connect output channels in a series connection for higher output voltages.
- Do not connect batteries for charging purposes to the output channels of the device.

All parameters are specified at 24 Vdc, 4 x 3.75 A, +25 °C ambient temperature and a 5 minutes run-in time unless otherwise noted.

6. Tripping Characteristics

The tripping characteristics can be uniformly configured as slow or fast for all output channels on all PISA-M versions.

Tripping characteristic		slow / fast	selectable, factory setting is fast
Tripping delay	typ.	0.22 s	for all output channels in fast characteristic at 1.5 x tripping current
	typ.	1.1 s	for all output channels in slow characteristic at 1.5 x tripping current
	max.	2 ms	in case of short circuit in fast tripping characteristic
	max.	10 ms	in case of short circuit in slow tripping characteristic

The following curves show the let-through current areas, which are located to the left of the curves, and the tripping areas, which are located to the right of the curves depending on the input voltage.

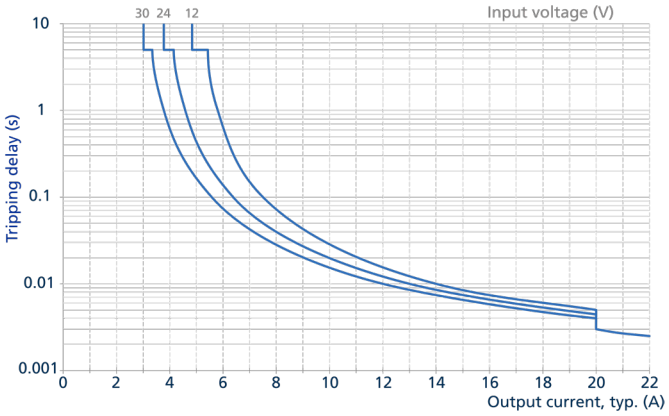

Fig. 6-1: **Tripping delay depending on input voltage fast tripping characteristic**

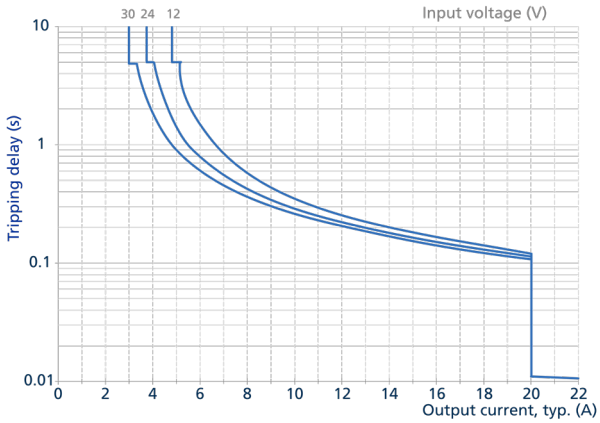

Fig. 6-2: **Tripping delay depending on input voltage slow tripping characteristic**

7. Charging of Capacitive Loads

Large input capacitors of drives, monitors or other consumers can result in an unintended tripping of the output channel when trying to turn-on such types of loads. This especially can occur after a reset or by turning on an output channel via the Channel Control Button or remotely. The PISA-M is designed to be exceptionally compatible with such types of loads.

The permissible capacitor sizes which can be connected to the output channel of the PISA-M depends on:

- Actual load current
- Tripping characteristics: Slow / Fast

Connecting larger capacitors than those specified below may unintentionally trip the output channels. In cases of uncertainty or when the input capacitance of your load is unknown, we advise conducting tests with the actual load.

Maximum capacitive loads supported with 24 Vdc operation:

- 3.75 A fast tripping, resistive load and capacities up to: 5 mF at 3.75 A current
- 3.75 A slow tripping, resistive load and capacities up to: 45 mF at 3.75 A current

Note: The selected power supply must be able to keep a stable output voltage even with high currents when attaching capacitive loads to the PISA-M. If the power supply cannot keep a stable output voltage, the max. capacitive loads will be differing from the charts below.

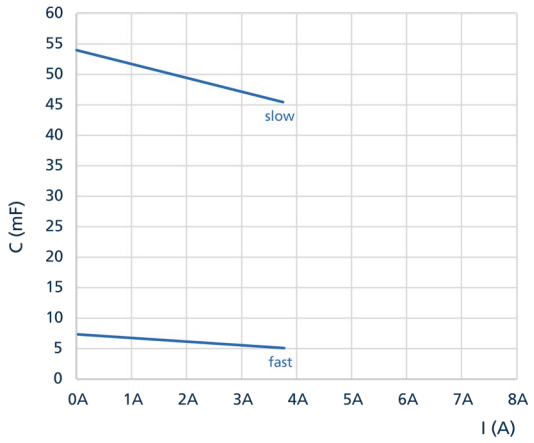

Fig. 7-1: **Typical capacitive loads for slow/fast tripping characteristic at 24V**

8. Fail-Safe Master Switch

The electronic circuit breakers from PULS do not include built-in melting fuses as fail-safe backup, but an intelligent fail-safe master switch.

The fail-safe master switch is continuously monitoring the total input current and all output currents. If a deviation of ≥ 1 A is detected between total output and input current for more than 1 s, then a fault is detected, and the fail-safe master switch disables the PISA-M unit.

The benefits of the fail-safe master switch are the accuracy and protection of lines and devices, as the deviation detection is related to the actual currents. Thus, the effective maximum current for each output channel in a device failure is limited to the tripping current + 1 A.

9. Power Supply Overload Protection

The electronic circuit breaker PISA-M offers a power supply overload protection. This means that if an overload occurs at an output channel, causing the output voltage of the upstream power supply to be affected, a microcontroller quickly shuts down the overloaded output channel by overriding the tripping characteristics. This rapid protection function ensures that sensitive devices such as PLCs controllers or sensors continue to be supplied with voltage reliably and without interruption, avoiding the risk of undervoltage shutdown for these kinds of devices.

The activation thresholds for the power supply overload protection shutdowns depend on the nominal supply voltage:

Activation threshold	typ.	10 V	at DC 12 V
	typ.	20 V	at DC 24 V
Reaction time	typ.	0.4 ms	at high sensitivity
	typ.	2.0 ms	at low sensitivity

To ensure high flexibility for different types of loads, the sensitivity of the Power Supply Overload Protection can be configured.

The following modes are available:

High sensitivity (factory setting)

This mode is recommended for sensitive loads such as PLC controller or sensors. The overloaded output channel will trip if the supply voltage falls below the activation threshold for > 0.4 ms.

Low sensitivity

This mode is recommended for capacitive loads and devices which are not sensitive to short voltage drops. The overloaded output channel will trip if the supply voltage falls below the activation threshold for > 2 ms.

Disabled

The Power Supply Protection Mode can be turned off.

Use this mode for huge capacitive loads and devices which are not sensitive to supply voltage dips.

Note: The Power Supply Overload Protection serves as a fault-back protection feature, it does not replace the necessity for proper system design, including:

- Choosing a power supply with sufficient power reserves.
  PULS recommends the usage of PULS power supplies with Easy Fuse Breaking Mode.
- Selecting appropriate wire cross-sections.

10. Device Overcurrent Protection

The PISA-M comes with a built-in safeguard mechanism to prevent overcurrent. It constantly monitors all output channel currents. If the total current exceeds the rated maximum of 20 A for 2 s or more, the device will reduce the total output current by switching of output channels, starting with overloaded output channels, then continuing with CH4 to CH1 until the total output current is 20 A or less.

This protection sequence is handled independently from selected fast or slow tripping characteristic.

All output channels tripped by this device protection mechanism will be indicated by continuous red double-flashing of the output channel status LED.

11. Signal Status Output and Control Input

The device is equipped with two signal ports: Signal control input (pin 3.1 - 3.2) and signal status output (pin 3.3 - 3.4).

The ports are galvanically isolated from the power circuits via optocouplers.

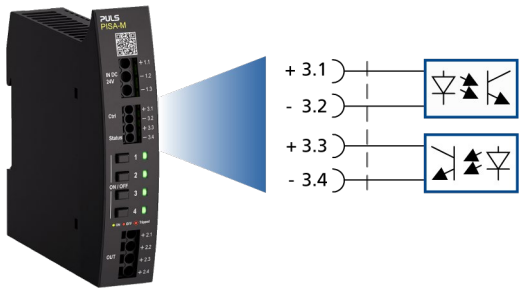

Fig. 11-1: **Signaling interface using optocouplers**

Signal Control Input (3.1 – 3.2)

The device is equipped with a control input for resetting all tripped output channels remotely. Therefore, apply a voltage between 10 and 30 Vdc for longer than 1 s to the status control input.

Reset voltage ratings	min. max.	10 Vdc 30 Vdc	
Reset delay	min.	1 s	Apply the reset voltage for at least this time to turn on tripped output channels.
Signal input voltage ratings	min. max.	-35 Vdc 35 Vdc	
Signal input current rating	max.	10 mA	
Isolation voltage	see chapter 21		

Note: The signal control input and status output ports can be configured as a Digital Coded Interface, see chapter 16 and user manual.

Signal Status Output (3.3 – 3.4)

The device is equipped with an electronical status output switch which provides information about the output channel status of PISA-M.

Signal output voltage ratings	min. max.	0 Vdc 35 Vdc
Signal output current rating	max.	10 mA
Isolation voltage	see chapter 21	

The electronical status switch can be configured with options:

Option 1: Switch closes if one or more output channels are tripped by overcurrent (**factory setting**).
Option 2: Digital Coded Interface, see chapter 16.
Option 3: Switch closes if one or more output channels are tripped or turned off manually.
Option 4: Switch closes if no output channel has tripped and all output channels are turned on.

Note: For detailed instructions on how to configure the status output, see the PISA-M user manual.

12. Functional Diagram

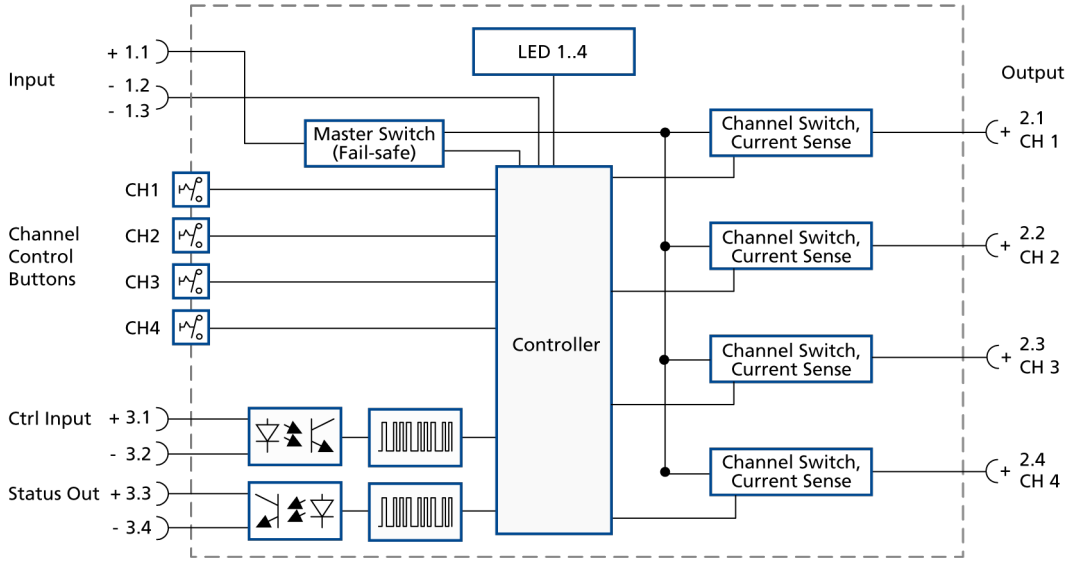

Fig. 12-1: **Functional diagram**

13. Terminals and Wiring

The terminals are IP20 finger safe and suitable for field- and factory wiring. All terminals are facing to front.

	Input Terminals	**Output Terminals**	**Signal Terminals**
Type	push-in terminals	push-in terminals	push-in terminals
Solid wire	max. 2.5 mm²	max. 2.5 mm²	max. 1.5 mm²
Stranded wire	max. 2.5 mm²	max. 2.5 mm²	max. 1.5 mm²
Stranded wire with ferrules without isolation	max. 2.5 mm²	max. 2.5 mm²	max. 1.5 mm²
Stranded wire with ferrules with isolation	max. 1.5 mm²	max. 1.5 mm²	max. 0.75 mm²
American wire gauge	AWG 12	AWG 12	AWG 16
Max. wire diameter (including ferrules – cramped ferrules shall be round or square, but not flattened or similar)	2.5 mm	2.5 mm	0.75 mm
Wire stripping length	10 mm	10 mm	10 mm
Ferrule length (ferrules without isolation)	10 mm	10 mm	10 mm
Ferrule length (conducting part for ferrules with isolation)	10 mm	10 mm	10 mm
Screwdriver	3 mm slotted to open the spring (0.5 x 3.0 mm)	3 mm slotted to open the spring (0.5 x 3.0 mm)	2.5 mm slotted to open the spring (0.4 x 2.5 mm)

14. Front Side and User Elements

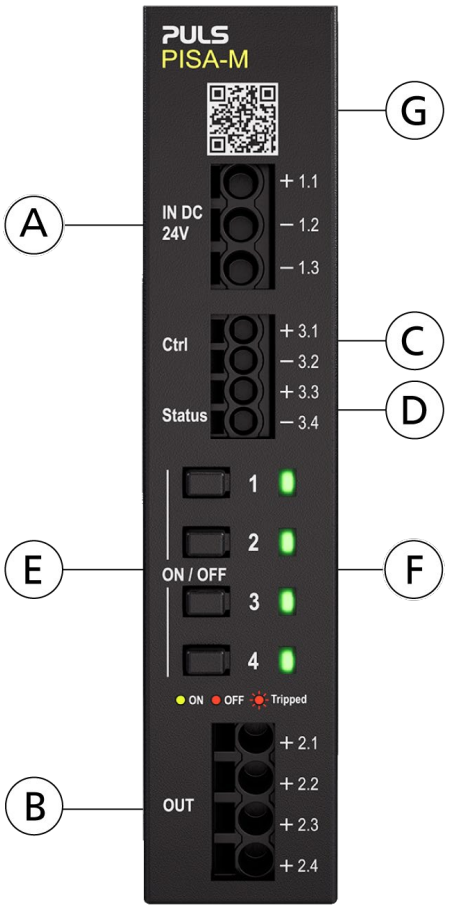

Fig. 14-1: **Front side**

A Input Terminals
Identical poles are internally connected.
(+) 1.1 Positive input pole
(-) 1.2, 1.3 Negative input pole

B Output Terminals
(+) 2.1 Channel 1 positive output pole
(+) 2.2 Channel 2 positive output pole
(+) 2.3 Channel 3 positive output pole
(+) 2.4 Channel 4 positive output pole

C Control Signal Input
(+) 3.1 Signal input positive pole
(-) 3.2 Signal input negative pole
Signal input can be used to send reset signal (1 s active) or for data communication using Digital Coded Interface.

D Status Signal Output
(+) 3.3 Signal output positive pole
(-) 3.4 Signal output negative pole
Signal output can be set to several operation modes.

E Channel Control Buttons
- ⇨ Press of single button to toggle selected output channel ON / OFF Required duration of button-press can be configured
- ⇨ Long press of single button to reset selected channel
- ⇨ Press of button combinations to enter configuration modes

Note: See user manual for more information

F Output Channel Status LEDs
- Green: Output channel ON
- Yellow: Output channel overload – prewarning before tripping channel
- Red: Output channel turned OFF (manually or remotely)
- Red (flashing): Output channel tripped due to overload of this channel
- Red (double-flashing): Output channel tripped due to device overload protection or power supply protection, see chapter 9 and 10
- LED OFF: Device is not powered

Note: For other blinking codes, see user manual

G QR code for direct access to documentation

15. PISA-M Local User Interface: Access Data and Set Configuration

The PISA-M allows users to customise settings through its local user interface. Configurable options include:

- Tripping characteristic: Slow / Fast
- Button reaction style: Standard (quick-press) and long-press
- Communication
- Power supply voltage protection: high sensitivity / low sensitivity / disabled

Additionally, the local user interface of the PISA-M provides access to the following data:

- Output channel status

Note: See PISA-M user manual for detailed instructions on accessing data and modifying the device configuration.

16. Digital Coded Interface

PISA-M features an easy and efficient communication via Digital Coded Interface (DCI), which allows an unidirectional and bidirectional communication via digital I/O of a PLC.

Note: The communication mode needs to be configured to DCI, as defined in the user manual.

Unidirectional Communication (preset in DCI mode)

Unidirectional communication transmits the status of each individual output channel. The status only differentiates between tripped output channels (high level) and not tripped output channels (low level). Not tripped output channels can be either on or off.

Each data sequence starts with a 200 ms start bit, followed by a 100 ms pause and 100 ms status signal. The statuses of the output channels 1 to 4 are transmitted in order, resulting in a total sequence duration of 1100 ms.

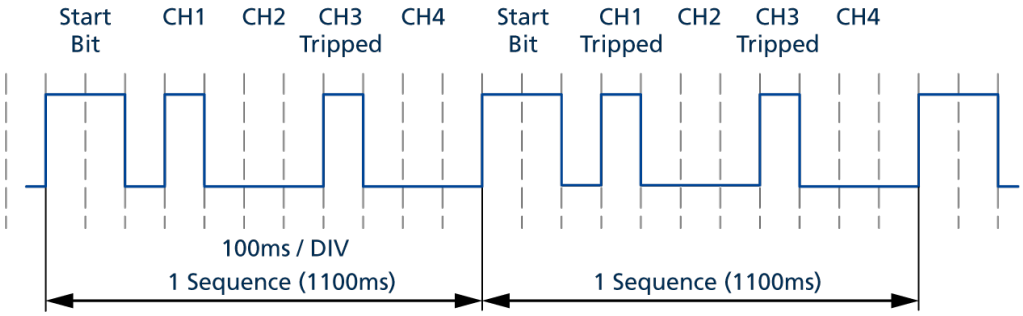

Fig. 16-1: **Digital Coded Sequence (unidirectional) – PISA-M to PLC**

Bidirectional Communication
The bidirectional communication mode enables extended functions. In addition to transmitting tripped output channels, the channels can also be remotely turned off and on. This also expands the scope of information transmitted by the device in the data sequence:

- The transmitted data sequence starts with a 150 ms start bit followed by a 100 ms pause.
- Tripped output channels are indicated by a high-level state lasting 100 ms.
- Output channels that are turned off are signaled with a high-level duration of 50 ms.
- Conversely, output channels that are turned on are indicated by a low-level duration of 100 ms.

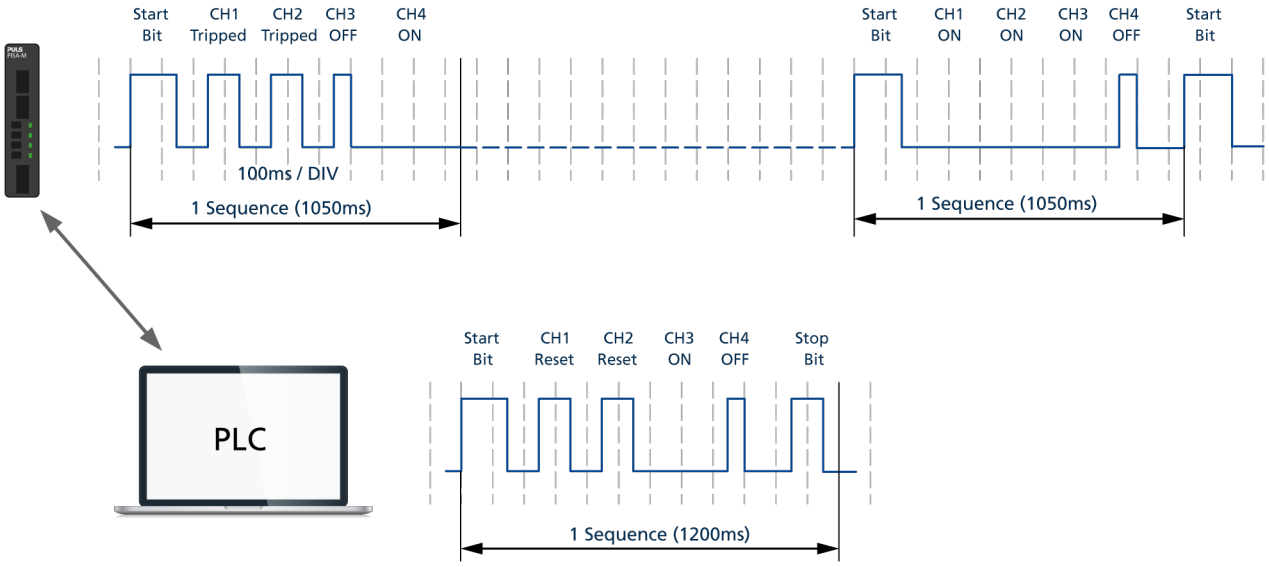

Fig. 16-2: **Digital Coded Sequence (bidirectional) PISA-M to PLC (top) and PLC to PISA-M (bottom)**

To enable the bidirectional mode, a data sequence as defined in Fig. 16-2 must be transmitted to the PISA-M. The module autonomously identifies incoming communication and switches to bidirectional mode.

Note: The PISA-M switches directly to bidirectional mode after receiving the first sequence.

Power shortages or switching the power off and on will reset the DCI back to unidirectional mode. Sending a correct data sequence to the PISA-M will enable the bidirectional mode again.

17. Lifetime Expectancy

The lifetime expectancy shown in the table indicates the minimum operating hours (service lifetime) and is mainly determined by the lifetime expectancy of the built-in electrolytic capacitors. Lifetime expectancy is specified in operational hours and is calculated according to the capacitor's manufacturer specification.

Note: The manufacturer of the electrolytic capacitors only guarantees a maximum lifetime of up to 15 years (131 400 h). Any number exceeding this value is a calculated theoretical lifetime which can be used to compare devices.

Lifetime expectancy	268 000 h	at 12 V, 4 x 5 A, ambient temperature +40 °C

18. MTBF

MTBF stands for **M**ean **T**ime **B**etween **F**ailures, which is calculated according to statistical device failures, and indicates reliability of a device. It is the statistical representation of the likelihood of a unit to fail and does not necessarily represent the lifetime of a product.

The MTBF figure is a statistical representation of the likelihood of a device to fail. A MTBF figure of e.g. 1 000 000 h means that statistically one unit out of 10 000 installed units will fail every 100 hours. However, it can not be determined if the failed unit has been running for 50 000 h or only for 100 h.

For these types of units the **MTTF** (**M**ean **T**ime **T**o **F**ailure) value is the same value as the MTBF value.

MTBF SN 29500, IEC 61709	1 281 000 h	4 x 5 A and +40 °C
	2 262 000 h	4 x 5 A and +25 °C
MTBF MIL HDBK 217F	425 000 h	4 x 5 A and +40 °C, Ground Benign GB40
	576 000 h	4 x 5 A and +25 °C, Ground Benign GB25
	88 000 h	4 x 5 A and +40 °C, Ground Fixed GB40
	115 000 h	4 x 5 A and +25 °C, Ground Fixed GB25

All parameters are specified at 24 Vdc, 4 x 3.75 A, +25 °C ambient temperature and a 5 minutes run-in time unless otherwise noted.

19. EMC

The EMC behaviour of the device is designed for applications in industrial environment as well as in residential, commercial and light industry environment without any restrictions.

The device complies with EN 61000-6-1, EN 61000-6-2, EN 61000-6-3, EN 61000-6-4. The device complies with FCC Part 15 rules. Operation is subjected to following two conditions: (1) this device may not cause harmful interference, and (2) this device must accept any interference received, including interference that may cause undesired operation.

EMC immunity	Power lines and housing			
Electrostatic discharge	EN 61000-4-2	contact discharge air discharge	8 kV 8 kV	Criterion A Criterion A
Electromagnetic RF field	EN 61000-4-3	80 MHz-6 GHz	10 V/m	Criterion A
Fast transients (Burst)	EN 61000-4-4	input lines output lines	2 kV 2 kV	Criterion A Criterion A
Surge voltage on input lines	EN 61000-4-5	(+) → (–) (+) / (–) → PE (DIN rail)	500 V 1 kV	Criterion B
Surge voltage on output lines	EN 61000-4-5	(+) → (–) (+) / (–) → PE (DIN rail)	500 V 1 kV	Criterion B
Conducted disturbance	EN 61000-4-6	0.15-80 MHz	10 V	Criterion A

EMC immunity	Signal lines and housing			
Electromagnetic RF field	EN 61000-4-3	80 MHz-6 GHz	10 V/m	Criterion A
Fast transients (Burst)	EN 61000-4-4	with coupling clamp	2 kV	Criterion A
Surge	EN 61000-4-5	signal lines → PE (DIN rail)	1 kV	Criterion B
Conducted disturbance	EN 61000-4-6	0.15-80 MHz	10 V	Criterion A

Performance Criterions:
A: The device shows normal operation behaviour within the defined limits.
B: The device operates continuously during and after the test. During the test minor temporary impairments may occur, which will be corrected by the device itself.

EMC emissions			
Conducted emission	IEC/CISPR 16-1-2, IEC/CISPR 16-2-1 IEC/CISPR 16-1-2, IEC/CISPR 16-2-1 IEC/CISPR 16-1-2, IEC/CISPR 16-2-1	input lines output lines signal lines	Limits for DC power ports fulfilled. Limits for DC power ports fulfilled. Limits for wired network ports fulfilled.
Radiated emission	EN 55011, EN 55032, CISPR 11, CISPR 32		Class B

Switching frequencies		
Microcontroller	16 MHz	fixed frequency
Internal auxiliary voltage	100 kHz	fixed frequency

All parameters are specified at 24 Vdc, 4 x 3.75 A, +25 °C ambient temperature and a 5 minutes run-in time unless otherwise noted.

20. Environment

Operational temperature	- 25 °C to + 70 °C	The operational temperature is the ambient or surrounding temperature and is defined as the air temperature 3 cm below the device.
Storage temperature	- 25 °C to + 85 °C	for storage and transportation
Output derating	1.25 A / 1000 m or 5 °C / 1000 m	No derating in standard mounting orientation below 2000 m altitude. For altitudes > 2000 m, see Fig. 20-2 for details.
	The derating is not hardware controlled. The user has to take this into consideration to stay below the derated current limits in order not to overload the unit.	
Humidity	5 to 95 % r.H.	IEC 60068-2-30
Atmospheric pressure	110-54 kPa	see Fig. 20-2 for details
Altitude	0 to 5000 m	see Fig. 20-2 for details
Degree of pollution	2	IEC 62103, EN 50178, not conductive
Vibration sinusoidal	2-17.8 Hz: ± 1.6 mm; 17.8-500 Hz: 2 g 2 hours / axis	according to IEC 60068-2-6
Shock	30 g 6 ms, 20 g 11 ms, 10 g 16 ms 3 shocks per direction, 18 bumps in total	according to IEC 60068-2-27
	Shock and vibration is tested in combination with DIN rails according to EN 60715 with a height of 15 mm and a thickness of 1.3 mm.	

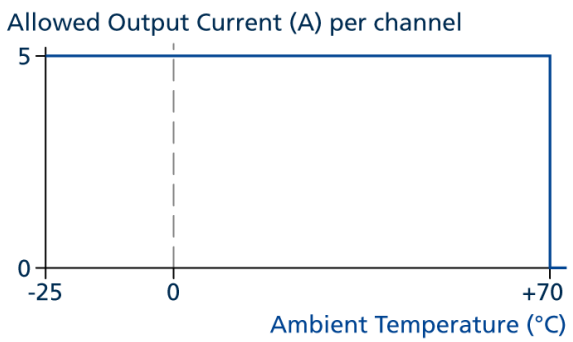

Fig. 20-1: **Output current vs. ambient temperature**

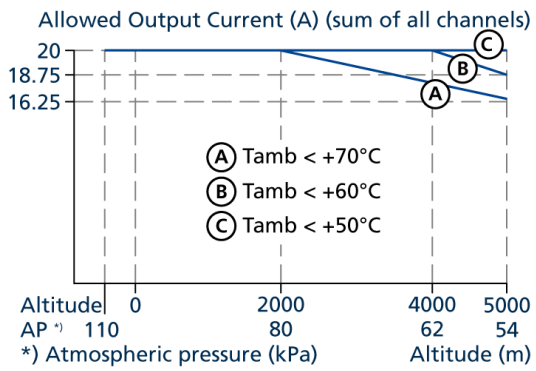

Fig. 20-2: **Output current vs. altitude**

All parameters are specified at 24 Vdc, 4 x 3.75 A, +25 °C ambient temperature and a 5 minutes run-in time unless otherwise noted.

21. Safety and Protection Features

Isolation resistance	> 10 MOhm	at delivered condition between power port and signals, measured with 500 Vdc
Isolation voltage	500 Vac 500 Vac	power ports to signal ports power ports / signal ports to housing
Class of protection	III	a PE (Protective Earth) connection is not required
Degree of protection	IP20	according to EN/IEC 60529
Overtemperature protection	not included	
Input overvoltage protection	max. 31.4 V	no harm or defect of the unit
Reverse polarity protection; input voltage	not included	make sure that the input voltage polarity is correct before applying the input voltage
Touch current (leakage current)	The leakage current which is produced by the module itself depends on the input voltage ripple and need to be investigated in the final application. For a smooth DC input voltage, the produced leakage current is less than 100 µA.	

All parameters are specified at 24 Vdc, 4 x 3.75 A, +25 °C ambient temperature and a 5 minutes run-in time unless otherwise noted.

22. Approved, Fulfilled or Tested Standards

UL 61010-2-201		UL Certificate Listed equipment for category NMTR - Electrical Equipment for Measurement, Control and Laboratory Use - Particular requirements for control equipment Applicable for US and Canada E-File: E198865
NEC Class 2	NEC CLASS 2	UL Certificate Limited Power Source Listed in the UL 61010-2-201 approval report, investigated according to UL 1310

23. Regulatory Product Compliance

EU Declaration of Conformity		The CE mark indicates conformance with the - EMC directive - ATEX directive - RoHS directive
REACH Regulation (EU)		Manufacturer's Statement EU regulation regarding the Registration, Evaluation, Authorisation and Restriction of Chemicals (REACH) fulfilled.
WEEE Directive		Manufacturer's Statement EU-Regulation on Waste Electrical and Electronic Equipment (WEEE) registered in Germany as business to business (B2B) products. WEEE Reg.-Nr. DE 555837529

24. Physical Dimensions and Weight

Plastic housing with DIN rail mount. Housing in black colour.

Width Height Depth	22.5 mm 104 mm 98 mm The DIN rail depth must be added to the unit depth to calculate the total required installation depth.
Weight	100 g
DIN rail	Use 35 mm DIN rail according to EN 60715 or EN 50022 with a height of 7.5 or 15 mm.
Installation clearances	see chapter 2
Penetration protection	small parts like screws, nuts, etc. with a diameter larger than 4 mm

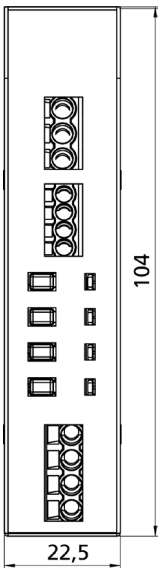

Fig. 24-1: **Front view**

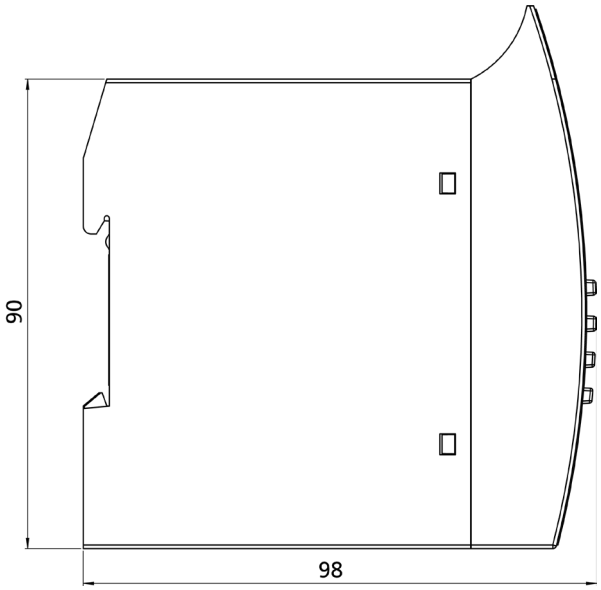

Fig. 24-2: **Side view**

25. Accessory

25.1. ZM3.Wall mounting bracket

Available from stock.
Bulk package with 25 pcs.
Short DIN rail element for wall or panel mounting made from high-grade polycarbonate material.
Shipped without screws or further fastening material. Mounting hole diameter: 4.2 mm.

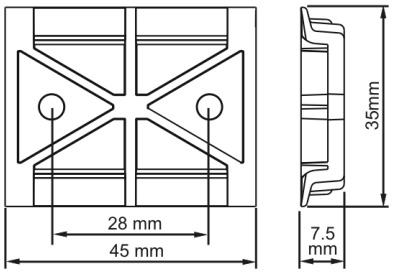

Fig. 25-1: **Mechanical dimensions**

Note: The picture is for representation only.
Protection module not included.