15 1505 01

Jack connectors

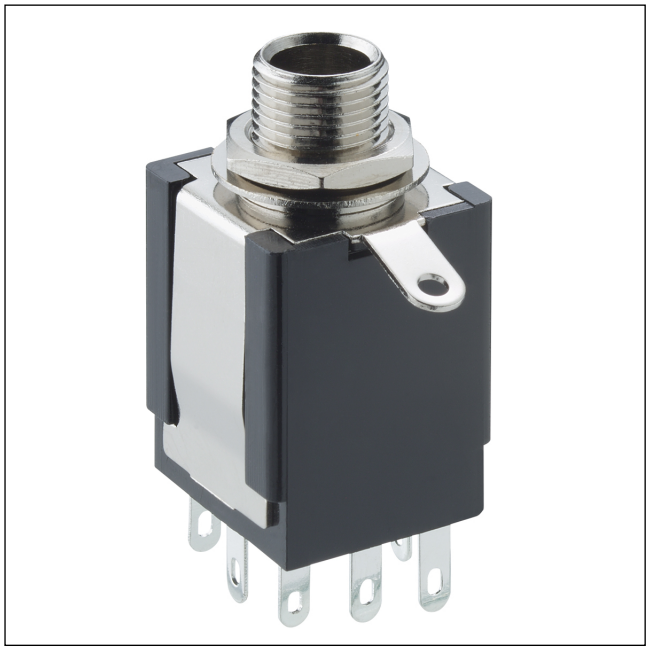

Jack chassis socket acc. to JIS C 6560 JC63J3E, 6.35 mm, 3 poles/stereo, with 2 change-over switches and solder eyes, for back side mounting

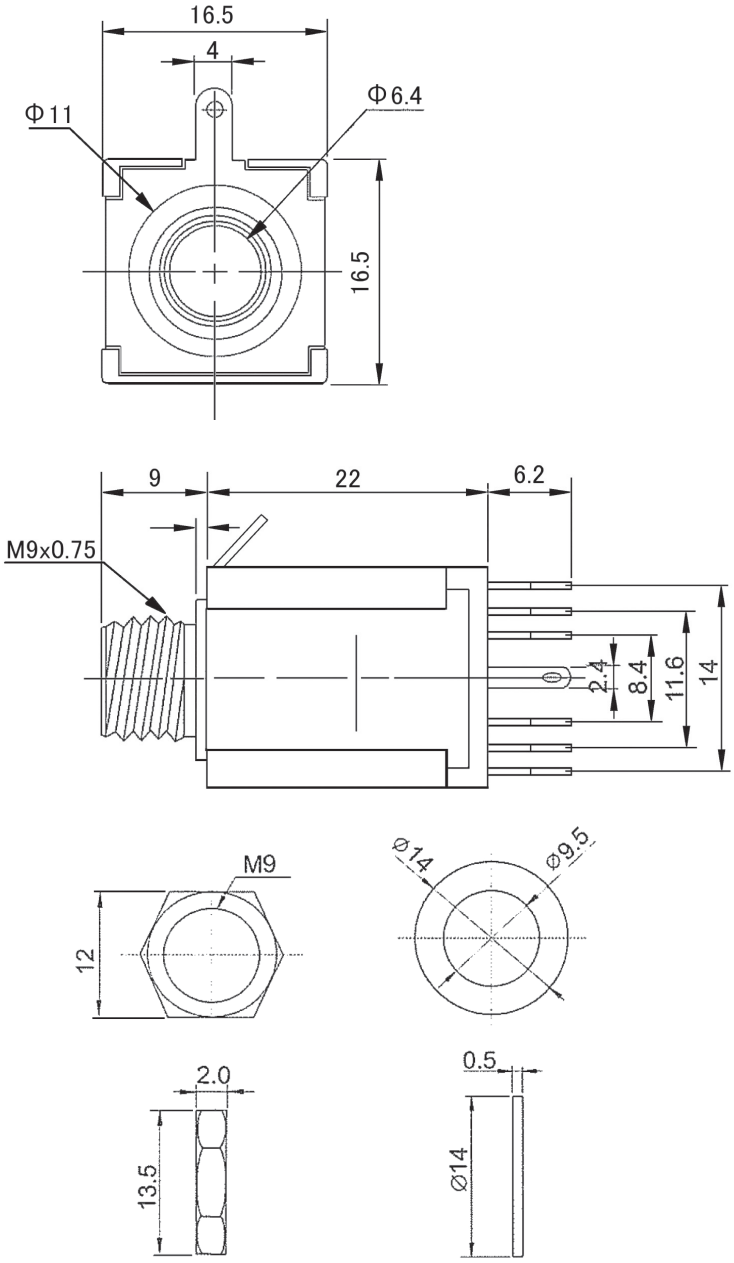

Environmental conditions

Temperature range	-16 °C/+60 °C

Materials

Insulating body	PC, V-2 according to UL94
Contact	CuSn/CuZn, silver/nickel-plated
Insulation	POM
Cover	ABS
Hexagonal nut	steel, nickel-plated
Washer	steel, nickel-plated
	steel, nickel-plated

Mechanical data

Mating cycles	measured with a gauge plug [1]
Insertion force	2,91–29,1 N [2]
Withdrawal force	5–40 N

[1] gemessen mit einem Lehrenstecker
[2] initial value

Electrical data (at T_{amb} 20 °C)

Contact resistance	≤ 30 mΩ
Rated current	1 A
Rated voltage	12 V DC
Rated impulse voltage	500 V/60 s
Insulation resistance	≥ 100 MΩ

Associated products

Counterparts
KLS 3

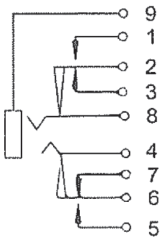

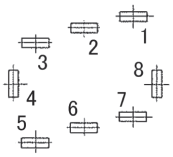

*a

*a terminal position, bottom view

15 1505 01

Designation	Pole Number	PU (Pieces)	MDQ (Pieces)
1505 01	3	50	200

Packaging:
in bulk, in a cardboard box or a plastic bag