16 1613 24

Power supply connectors

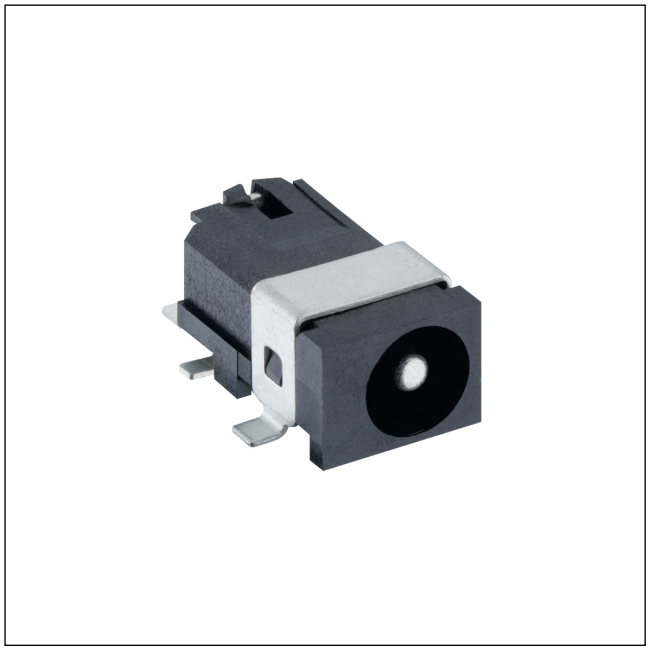

Power supply chassis socket,
for plugs 4.0 mm x 1.7 mm, acc. to JEITA EIAJ RC-5322 type 2 JSAJ21, angular version, with break contact, for printed circuit boards, surface mounting technology (SMT)

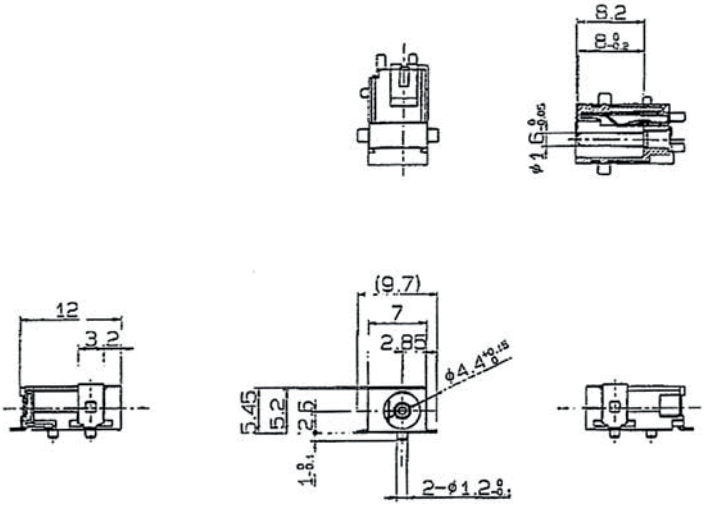

*a printed circuit board layout, components side view

Environmental conditions

Temperature range	-20 °C/+70 °C

Materials

Insulating body	PA
Contact	CuZn, silver-plated/tin-plated

Mechanical data

Diameter opening	4.4 mm
Diameter center pin	1.6 mm
Mating cycles	≥ 5000
Insertion force	5–20 N
Withdrawal force	5–20 N

Electrical data (at T_{amb} 20 °C)

Contact resistance	≤ 30 mΩ
Rated current	2 A
Rated voltage	6.3 V DC
Rated impulse voltage	500 V/60 s
Insulation resistance	≥ 100 MΩ

Associated products

Counterparts
1636 02

16 1613 24

Designation	Pole Number	PU (Pieces)	MDQ (Pieces)
1613 24 VP3	2	900	900

Packaging:
on reel