16 1633 03

Power supply connectors



Power supply plug,
5.5 mm x 2.1 mm, straight version, with fork-shaped contact, solder eyes and bend protection

16 1633 03

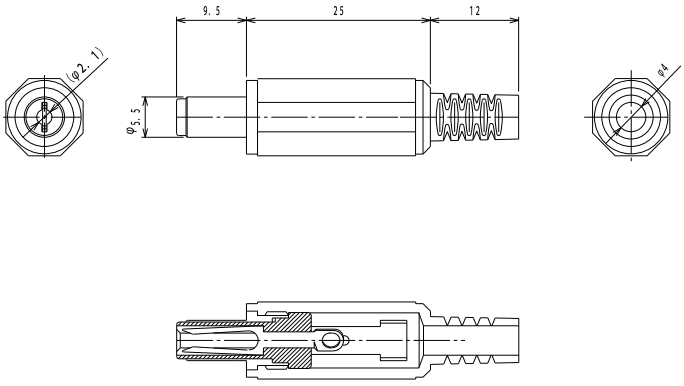

Environmental conditions

Temperature range	-20 °C/+70 °C

Materials

Insulating body	POM
Contact	Cu alloy/Fe, nickel-plated
Housing	PE

Mechanical data

Outer diameter	5.5 mm
Inner diameter	2.1 mm

Connectable conductors for solder area

Cable diameter	4 mm

Electrical data (at T_{amb} 20 °C)

Contact resistance	≤ 30 mΩ
Rated current	2 A
Rated voltage	24 V DC
Rated impulse voltage	500 V/60 s
Insulation resistance	≥ 100 MΩ

Associated products

Counterparts

1610 06	1613 14	1613 18
1613 28	1613 30	1613 32
1614 09	1614 14	1614 16
1614 19	NEB 21 R-C	NEB/J 21
NEB/J 21 C	NEB/J 21 R	NEK/J 210

16 1633 03

Designation	Pole Number	PU (Pieces)	MDQ (Pieces)
1633 03	2	100	500