16 1633 04

Power supply connectors



Power supply plug,
5.5 mm x 2.5 mm, straight version, with fork-shaped contact, solder eyes and bend protection

16 1633 04

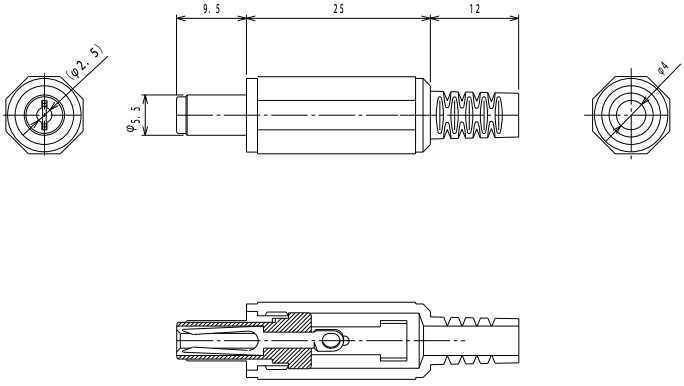

Environmental conditions

Temperature range	-20 °C/+70 °C

Materials

Insulating body	POM
Contact	Cu alloy/Fe, nickel-plated
Housing	PE

Mechanical data

Outer diameter	5.5 mm
Inner diameter	2.5 mm

Connectable conductors for solder area

Cable diameter	4 mm

Electrical data (at T_{amb} 20 °C)

Contact resistance	≤ 30 mΩ
Rated current	2 A
Rated voltage	24 V DC
Rated impulse voltage	500 V/60 s
Insulation resistance	≥ 100 MΩ

Associated products

Counterparts

- 1610 05
- 1610 07
- 1613 21
- 1613 33
- 1614 10
- 1614 15
- 1614 20
- NEB/J 25
- NEB/J 25 C
- NEK/J 250

16 1633 04

Designation	Pole Number	PU (Pieces)	MDQ (Pieces)
1633 04	2	100	500