16 1634 01

Power supply connectors



Power supply plug,
5.5 mm x 2.5 mm, straight version, with bayonet lock, with solder eyes

16 1634 01

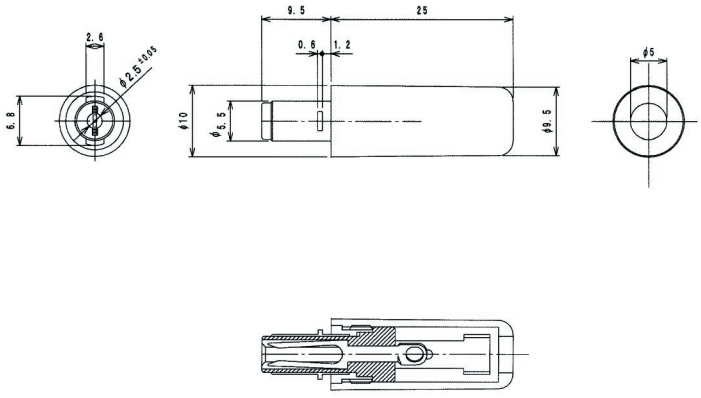

Environmental conditions

Temperature range	-20 °C/+70 °C

Materials

Insulating body	POM
Contact	Cu alloy/steel, nickel-plated
Housing	ABS

Mechanical data

Outer diameter	5.5 mm
Inner diameter	2.5 mm

Connectable conductors for solder area

Cable diameter	5 mm

Electrical data (at T_{amb} 20 °C)

Rated current	2 A
Rated voltage	24 V DC
Rated impulse voltage	500 V/60 s
Insulation resistance	≥ 100 MΩ

Associated products

Counterparts

1610 04 1613 23

16 1634 01

Designation	Pole Number	PU (Pieces)	MDQ (Pieces)
1634 01	2	100	500

Packaging:
in bulk, in a cardboard box or a plastic bag