24 2411 05

USB and IEEE 1394 connectors



USB 2.0 chassis socket type B, upright version, for printed circuit boards

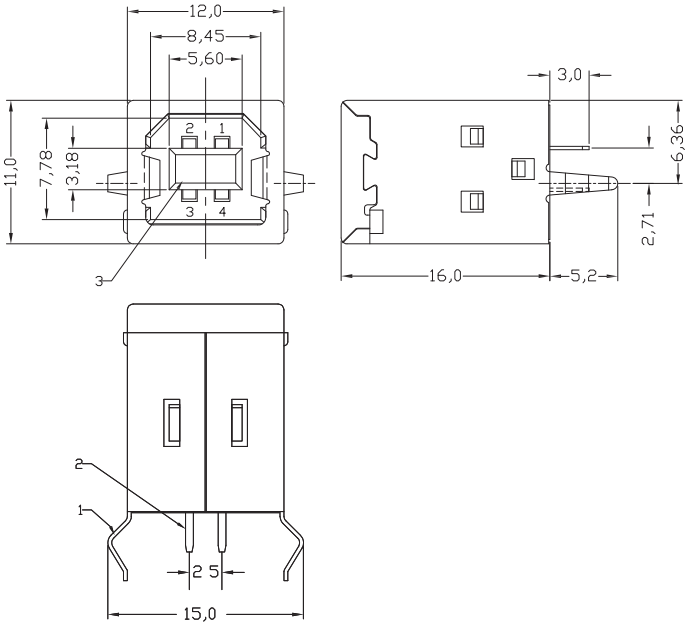

*a

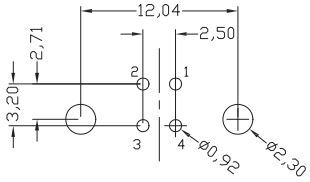

*a printed circuit board layout

Environmental conditions

Temperature range	-55 °C/+85 °C

Materials

Insulating body	PBT GF, V-0 according to UL94
Contact spring	CuSn, gold-plated
Housing	CuZn, nickel-plated

Mechanical data

Mating cycles	1500
Insertion force	≤ 35 N
Withdrawal force	≥ 10 N

Electrical data (at T_{amb} 20 °C)

Contact resistance	≤ 30 mΩ
Rated current	1 A
Rated voltage	30 V AC
Rated impulse voltage	500 V AC/60 s
Insulation resistance	≥ 100 MΩ

Associated products

24 2411 05

Designation	Pole Number	PU (Pieces)	MDQ (Pieces)
2411 05	4	100	500

Packaging:
in a tray