24 2434 01

USB and IEEE 1394 connectors



USB 3.1 chassis socket type C, 24 poles, with sealing towards mounting plate, angular version, for printed circuit boards, surface mounting technology (SMT/THR)

24 2434 01

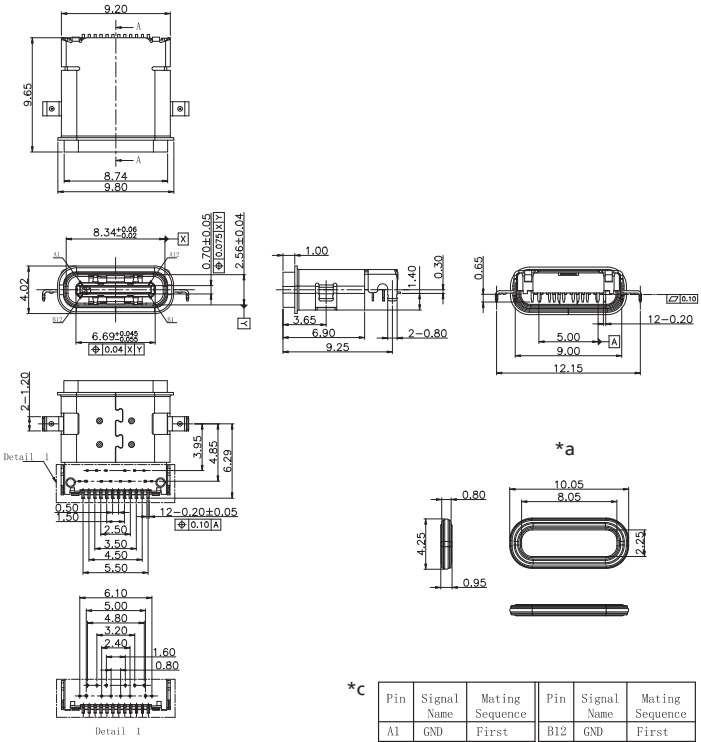

*c

Pin	Signal Name	Mating Sequence	Pin	Signal Name	Mating Sequence
A1	GND	First	B12	GND	First
A2	SSTXp1	Second	B11	SSRXp1	Second
A3	SSTXn1	Second	B10	SSRXn1	Second
A4	V_{BUS}	First	B9	V_{BUS}	First
A5	CC1	Second	B8	SBU2	Second
A6	Dp1	Second	B7	Dn2	Second
A7	Dn1	Second	B6	Dp2	Second
A8	SBU1	Second	B5	CC2	Second
A9	V_{BUS}	First	B4	V_{BUS}	First
A10	SSRXn2	Second	B3	SSTXn2	Second
A11	SSRXp2	Second	B2	SSTXp2	Second
A12	GND	First	B1	GND	First
SHELL		GND	SHELL		GND

Environmental conditions

Temperature range	-40 °C/+80 °C

Materials

Insulating body	LCP, V-0 according to UL94
Contact spring	Cu alloy, gold-plated
Housing	steel, nickel-plated
Seal	Silicone rubber

Mechanical data

Mating cycles	10000
Insertion force	5–20 N
Withdrawal force	6–20 N

Electrical data (at T_{amb} 20 °C)

Contact resistance	40 mΩ
Rated current	5 A/1.25 A/0.25 A
Rated voltage	5 V/20 V
Rated impulse voltage	100 V/60 s
Insulation resistance	≥ 100 MΩ

Associated products

Counterparts
2483 01

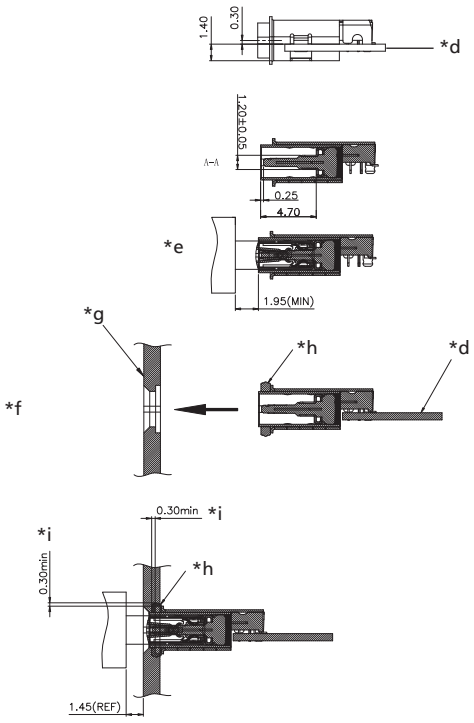

*a gasket ring
*b printed circuit board layout, components side view
*c pin assignment
*d printed circuit board
*e mated condition
*f installation situation and recommendation for sealing
*g chassis plate
*h gasket ring
*i recommended compression of the gasket ring 40–50 %

24 2434 01

Designation	Pole Number	PU (Pieces)	MDQ (Pieces)
2434 01	24	700	700

Packaging:
on reel