16 1614 22

Power supply connectors



Power supply chassis socket,
for plug 3.4 mm x 1.4 mm, potted and with sealing towards mounting plate, IPx7, angular version, with break contact, for printed circuit boards

16 1614 22

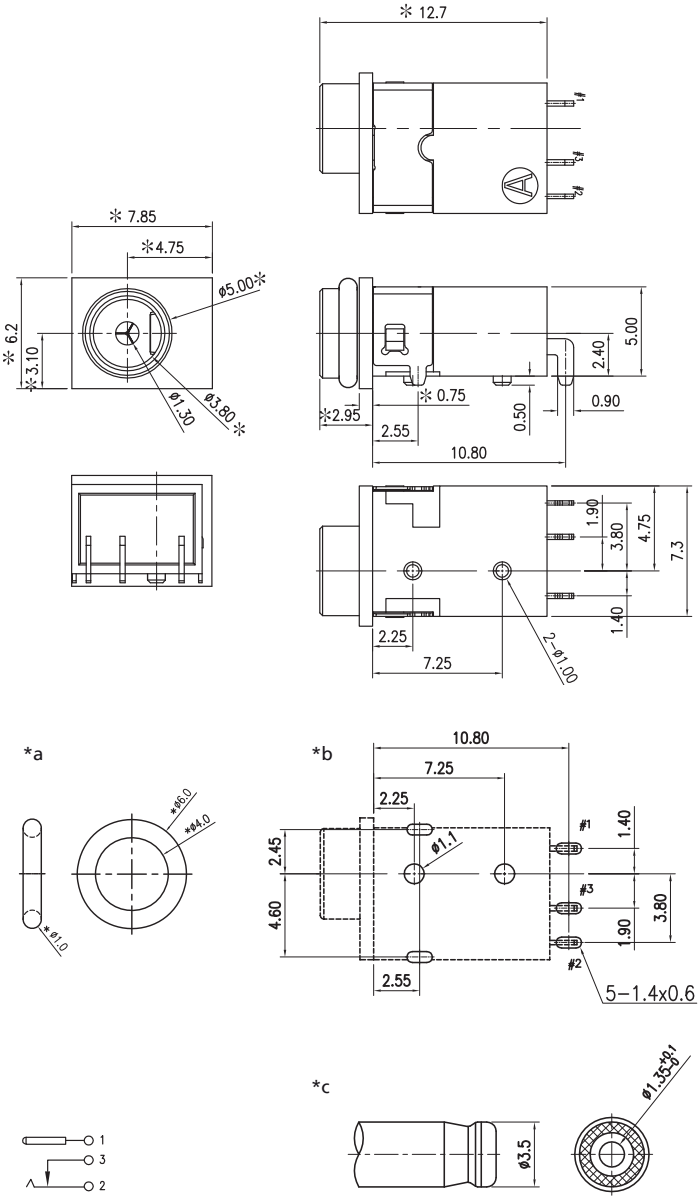

*a O-ring is packed separately
*b printed circuit board layout, components side view
*c proper counterpart

Environmental conditions

Temperature range	-25 °C/+70 °C

Materials

Insulation body/housing	PA, V-0 according to UL94
Contact spring	CuSn, nickel and flash gold-plated
Contact pin	CuZn, nickel and flash gold-plated
Potting	Silicone
O-ring gasket	Silicone, V-0 according to UL94

Mechanical data

Diameter opening	3.8 mm
Diameter center pin	1.3 mm
Mating cycles	≥ 5000
Insertion force	3–30 N
Withdrawal force	3–30 N

Electrical data (at T_{amb} 20 °C)

Contact resistance	≤ 50 mΩ
Rated current	3.5 A
Rated voltage	16 V DC
Rated impulse voltage	500 V/60 s
Insulation resistance	≥ 100 MΩ

Associated products

Counterparts
NES/J 135

16 1614 22

Designation	Pole Number	PU (Pieces)	MDQ (Pieces)
1614 22	2	250	500

Packaging:
on reel