LC-POWER™

www.lc-power.com

7042B - Manual

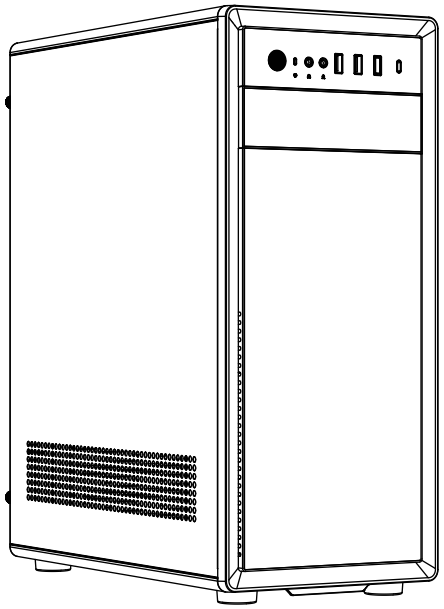

Accessory Pack

A		PSU Screw	6	B		Copper Pillar Sleeve	3
C		Motherboard Screw	13	D		HHD Screw	8

Specification

Model number	7042B
Case dimension	420 x 180 x 352 mm
I/O	1x USB-C | 1x USB-A 3.0 | 2x USB-A 2.0 | HD Audio
Mainboard	ATX, M-ATX, ITX
3,5" HDD	up to 2 (without front fan)
2,5" SSD	1
PCI slot	7
GPU card	290 mm max. (length)
CPU cooler	150 mm max. (height)
Fan support	Front：1x120 mm (optional) Back：1x120 mm (optional)
Cable management	15 mm

1. Disassembly

Unscrew the screws from the side panels on the back and remove the left and right panels.

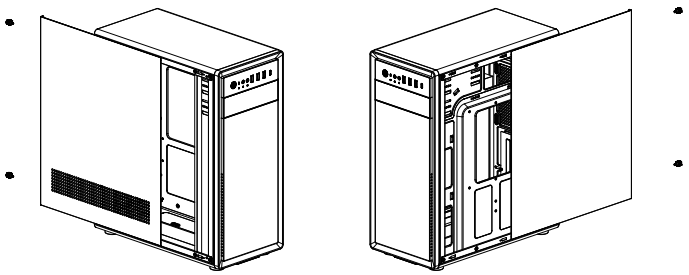

Open the front panel from the bottom.

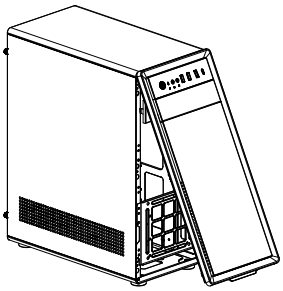

2. Front panel fan installation

Insert a 120 mm fan and adjust the fan to blow air inward align with the corresponding holes and tighten the screws.

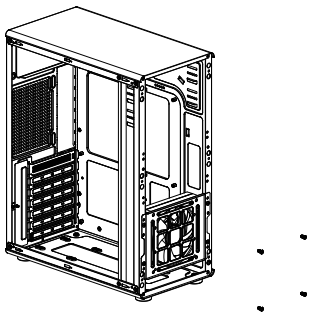

3. Back side fan installation

Insert a 120 mm fan and adjust the fan to blow air outward align with the corresponding holes and tighten the screws.

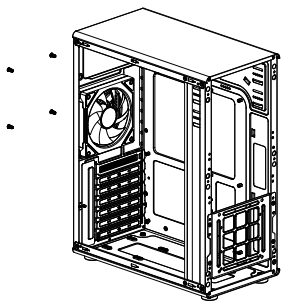

4. Mainboard installation

Insert the I/O seal into the I/O port.
Insert the mainboard, align it with the corresponding holes and tighten the screws to fix the mainboard.

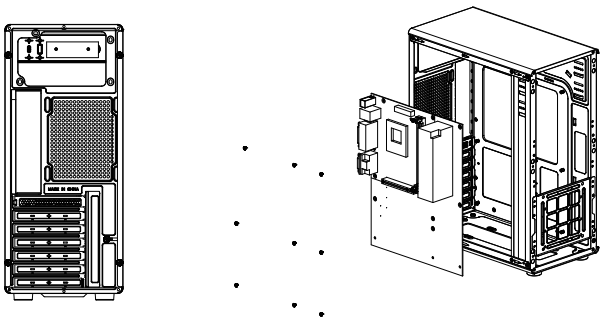

5. Power supply unit installation

Insert the power supply and align with the corresponding holes.
Tighten the screws on the back panel to secure the power supply.

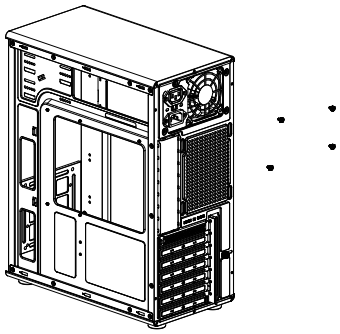

6. HDD & SSD installation

Insert the HDD and SSD hard drives and align them with the corresponding holes.
Tighten the screws to secure the hard drives.

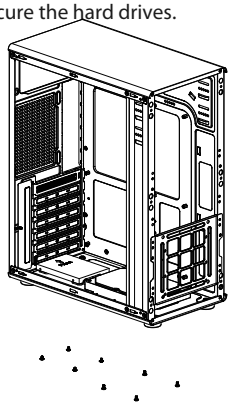

7. Installing front fan slot - 3,5“ HDD (Share with fan slot)

Remove the front panel fan holder, and align the HDD with the corresponding holes and tighten the screws. Then lock the fan bracket back into the case.

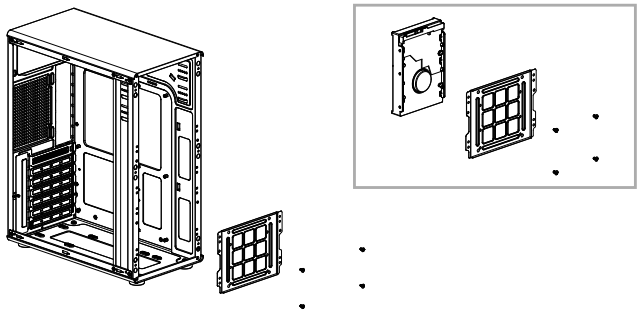

8. Graphic card installation

Remove the PCI card slot.
Insert the GPU and align with the corresponding holes.
Tighten the screws to secure the GPU.

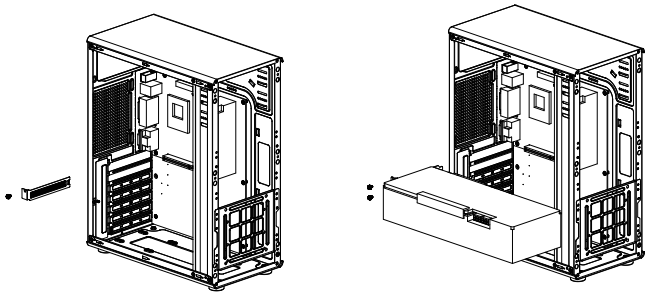

9. I/O cables installation

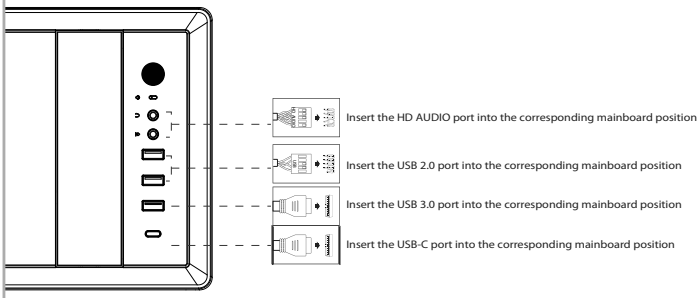

10. 5,25“ drive installation

Insert the CD/Blu-ray drive into the front panel installation position, align with the corresponding holes and fix the screws from both sides.

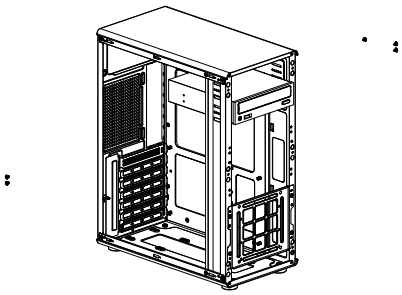

Service & notes

Avoid direct sunlight and a high temperature environment, keep the case far away from fire and heat sources.

Keep it in dry places, keep it away from corrosiveness causing materials.

The product has a two year warranty period from the date of purchase, service issues will be handled by your dealer.

If the case is damaged due to improper operation, the warranty period expires immediately.

Check www.lc-power.com or contact us by e-mail at: service@lc-power.com.

Silent Power Electronics GmbH
Formerweg 8
47877 Willich
Germany

www.lc-power.com
service@lc-power.com