Mini 1813.2

Loudspeaker and sound capsule





Data sheet
Last updated: 09/2026

Importer

Name and address	Tams Elektronik GmbH Fuhrberger Str. 4 | 30625 Hannover | Germany
Importer's item no.	70-03038-01
Package contents	1 loudspeaker, 1 sound capsule

Technische Daten

Abmessungen netto	18 x 13 x 2,5 mm (± 0,2 mm)
Abmessungen mit Schallkapsel	18 x 13 x 7 mm (± 0,2 mm)
Nenn-Belastbarkeit	0,7 W
maximale Belastbarkeit	1,0 W
Nennimpedanz	8 Ohm (± 20%)
Übertragungsbereich (-10 dB)	350–20.000°Hz
Mittlerer Schalldruckpegel	90 ± 3 dB (1°W/1°m)
Resonanzfrequenz fs	550 Hz (± 20%)
Länge des Anschlusskabels	---
Gewicht netto	2 g
Gewicht mit Schallkapsel	2,5 g
Material Schallkapsel	PLA (Polylactid)

Manufacturer of the loudspeaker

Name and address	Shenzhen Kaiboer Electronic Technology Co., Limited | China
Manufacturer's designation	1318 Speaker
Manufacturer's item no.	KBE1318S3.0HT

tams elektronik

SPECIFICATION

SHEET FOR APPROVAL

Customer：

Nomenclature： 1318 SPEAKER

Item No.：

Your Part No.：

Our Part No.： KBE1318S3.0HT

Vereion： V1.0

Date： 2021.06.03

CUSTOMER 客户	APPROVER 审批	CHECKER 制作

KAIBOER

深圳市凯博尔电子科技有限公司

深圳市宝安区航城街道黄田三力工业园 6 栋 3 楼

TEL:0086-0755-2733 3691 FAX:0086-0755-2733 3690
HTTP: www.szkber.com MELL:szkber@126.com

tandelektronik

KAIBOER 深圳市凯博尔电子科技有限公司	SPECIFICATIONS		ITEM NO.	1/7
	MODEL NO.	KBE1318S3.0HT	SPEC. No	21060301

1	产品概要/PRODUCT OUTLINE	
	1-1 适用范围/SCOPE	This specification is applied to mobile telephone
	1-2 尺寸/DIMENSIONS	As shown in fig (4)
	1-3 大小/SIZE	（L）13.0×（W）18.0×（H）2.5(±0.2 mm)
	1-4 重量/NET WEIGHT	APPROX. g
2	标准试验状态 Standard Test Condition	一般规格试验状态（特殊要求除外） 常温 17～25℃，常湿 45%～85%，气压 860～1060hPa 但判定上有疑问时，试验状态为： 温度 20±2℃，相对湿度 60%～70%，气压 860～1060hPa
		The test conditions unless otherwise specified should be Normal temperature 5 to 35℃,Normal humidity 45 to 85% And normal atmospheric pressure 860 to 1060hPa However,if there arises a doubt in judgement,the test conditions shall be as follows: Temperature 20±2℃ Humidity 60%～70% Atmosphere 860～1060hPa

PREPARED	CHECKED	APPROVED
Liu	*Wang*	*Li*

tams elektronik

KAIBOER 深圳市凯博尔电子科技有限公司	SPECIFICATIONS		ITEM NO.	2/7
	MODEL NO.	KBE1318S3.0HT	SPEC. No	21060301

3	电气规格/ELECTRICAL SPECIFICATIONS	
	3-1 输出音压位准 SOUND PRESSURE LEVEL	90± 3 dB SPL /2.36V/10CM at 1000Hz
	3-2 阻抗 IMPEDANCE	8±20% Ω 1.0V at 2000Hz
	3-3 频宽回应 FREQUENCY RESPONSE	As shown in fig(2)
	3-4 额定输入功率 Rate Input Power	0.7W In 1cc Box
	3-5 最大输入功率 Max Input Power	1.0W In 1cc Box For 1 Minute
	3-6 异常音测试 Buzzes & Rattles	Must be free audible noise （In 1cc Box） (From 300 Hz to 3.4KHz frequency range, Input:2.37V)
	3-7 最低共振频率 LOWEST RESONANCE FREQUENCY in1cc Box(f0)	Fo:550±120 Hz/1V Fo:850±120 Hz/1V
	3-8 有效频宽 FREQUENCY RANGE	F0～10KHz
	3-9 失真 TOTAL HARMONIC DISTORTION	15%MAX. at 800~1200Hz, 2.0rms/10cm 10% MAX. at 1201~5KHz, 2.0rms/10cm fig(3)
	3-9 工作温度 OPERATING TEMPERATURE	-20 C to +75 C
	3-10 贮存温度 STORE TEMPERATURE	-30 C to +85 C

tams elektronik

PREPARED	CHECKED	APPROVED
Liu	*Wang*	*Li*

4	信赖性试验/RELIABLE TEST	
	4-1 概述 GENERAL	After any following tests the response at 1 KHz shall not deviate more than 3 dB from the initial value
	4-2 负载试验 LOAD TEST	输入电压 / Input Power : 2.37V 输入信号 / Input Signal : white noise (In 1cc Box) 时 间 / Duration : 96 hours 试验后放置时间 / Duration of Recovery : 4hrs of conditions at 20℃
	4-3 湿度试验 HUMIDITY TEST	温 度 / Temperature : +40℃ 3 C 相对湿度 / Relative Humidity : 90%~95% R.H. 时 间 / Duration : 96 hours 试验后放置时间 / Duration of Recovery : 4hrs of conditions at 20℃
	4-4 低温试验 LOW TEMPERATURE TEST	温 度 / Temperature : -30 C 3 C 时 间 / Duration : 96 hours 试验后放置时间 / Duration of Recovery : 4hrs of conditions at 20℃
	4-5 高温试验 HIGH TEMPERATURE TEST	温 度 / Temperature : +85 C 3 C 时 间 / Duration : 96 hours 试验后放置时间 / Duration of Recovery : 4hrs of conditions at 20℃
	4-6 温度循环试验 TEMPERATURE CYCLES TEST	TEMPERTURE: 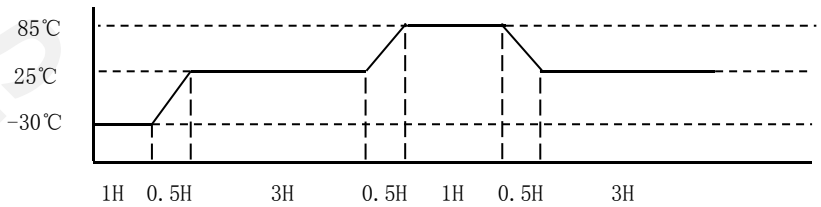 循环次数 / Cycles : 10 Cycles 试验后放置时间 / Duration of Recovery : 4hrs of conditions at 20℃
	4-7 落地试验 TEST DROP TEST	落下方向 / Direction : 1 corner,3 sides,6 faces 落下回数 / Times : Once in each directions 高 度 / Height : From 0.7m(on the concrete) 试验后放置时间 / Duration of Recovery : 4hrs of conditions at 20℃ 依包装实体一角三棱六面作自由落体试验后,实体外观需正常
	4-8 振动试验 VIBRATION TEST	振 动 / Vibration : 10-55Hz (In 1cc Box) 振 幅 / Amplitude : 1.5mm 时 间 / Times : 1 hour in each of 3axes 试验后放置时间 / Duration of Recovery : 4hrs of conditions at 20℃

tams elektronik

KAIBOER 深圳市凯博尔电子科技有限公司	SPECIFICATIONS		ITEM NO.	4/7
	MODEL NO.	KBE1318S3.0HT	SPEC. No	21060301

Liu	Wang	Li

5

FREQUENCY MEASURING CIRCUIT (SPEAKER MODE) (Fig.1)

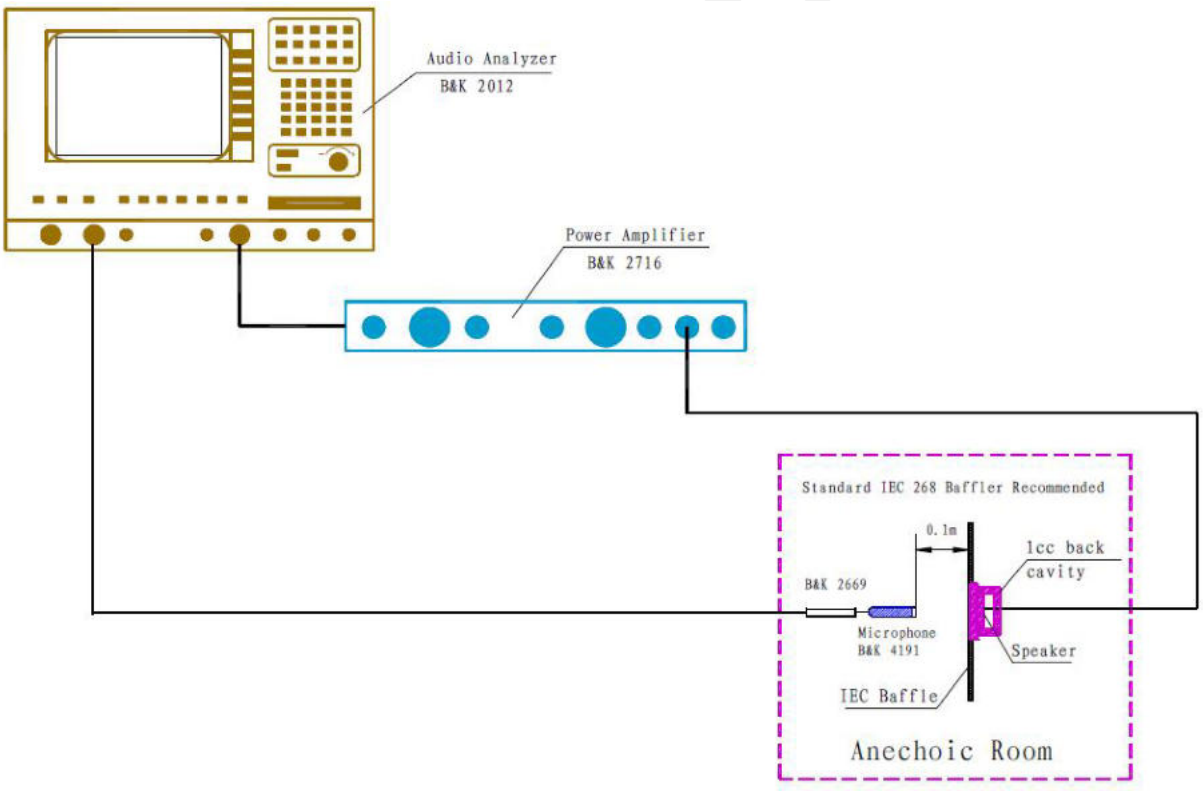

Fig.1 Illustration of measuring diagr.am (speaker mode)

PREPARED	CHECKED	APPROVED
Liu	*Wang*	*Li*

KAIBOER 深圳市凯博尔电子科技有限公司	SPECIFICATIONS		ITEM NO.	5/7
	MODEL NO.	KBE1318S3.0HT	SPEC. No	21060301

6

TYPICAL FREQUENCY RESPONSE CURVE (SPEAKER MODE) (Fig.2)

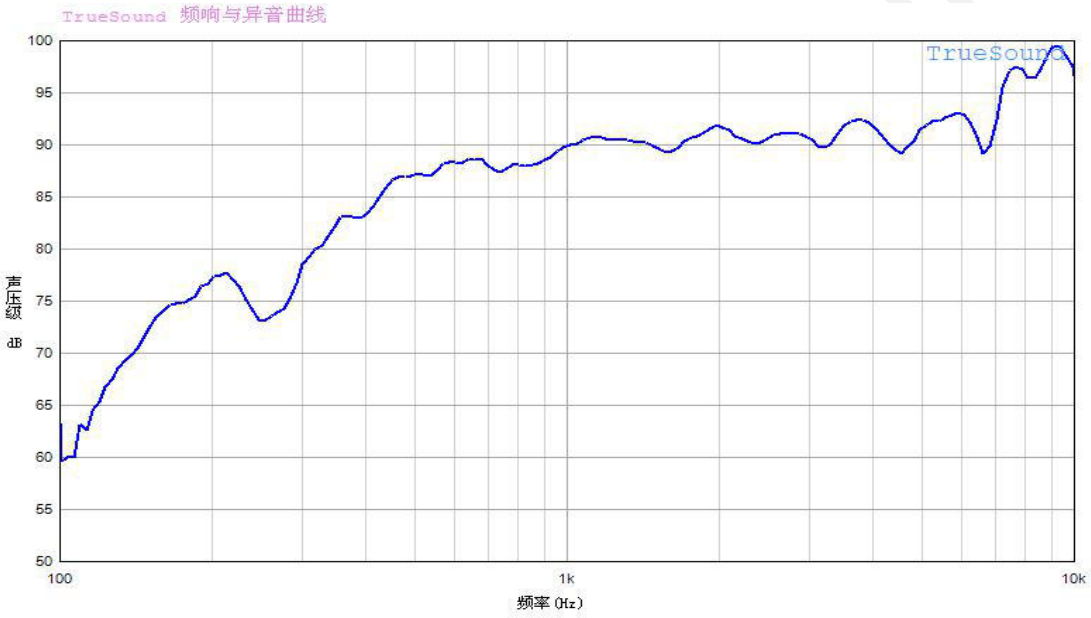

DISTORTION CURVE(fig.3)

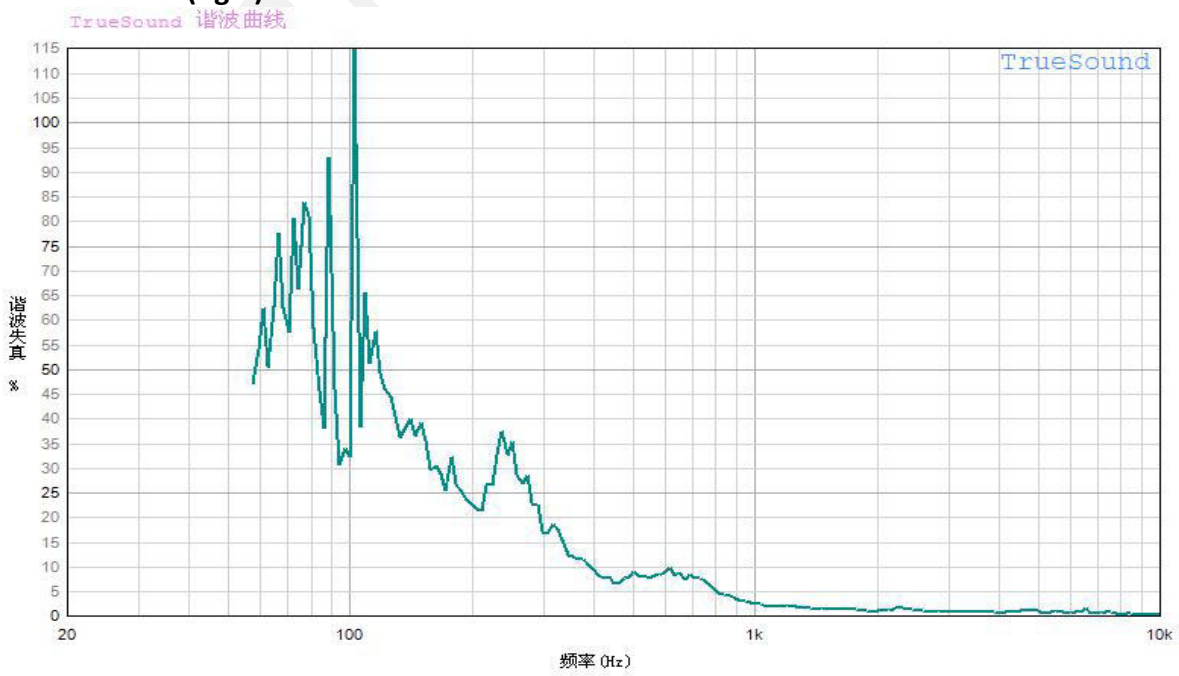

PREPARED	CHECKED	APPROVED
Liu	*Wang*	*Li*

深圳市凯博尔电子科技有限公司	SPECIFICATIONS		ITEM NO.	6/7
	MODEL NO.	KBE1318S3.0HT	SPEC. No	21060301

7	DIMENSIONS（fig.4）

tams elektronik

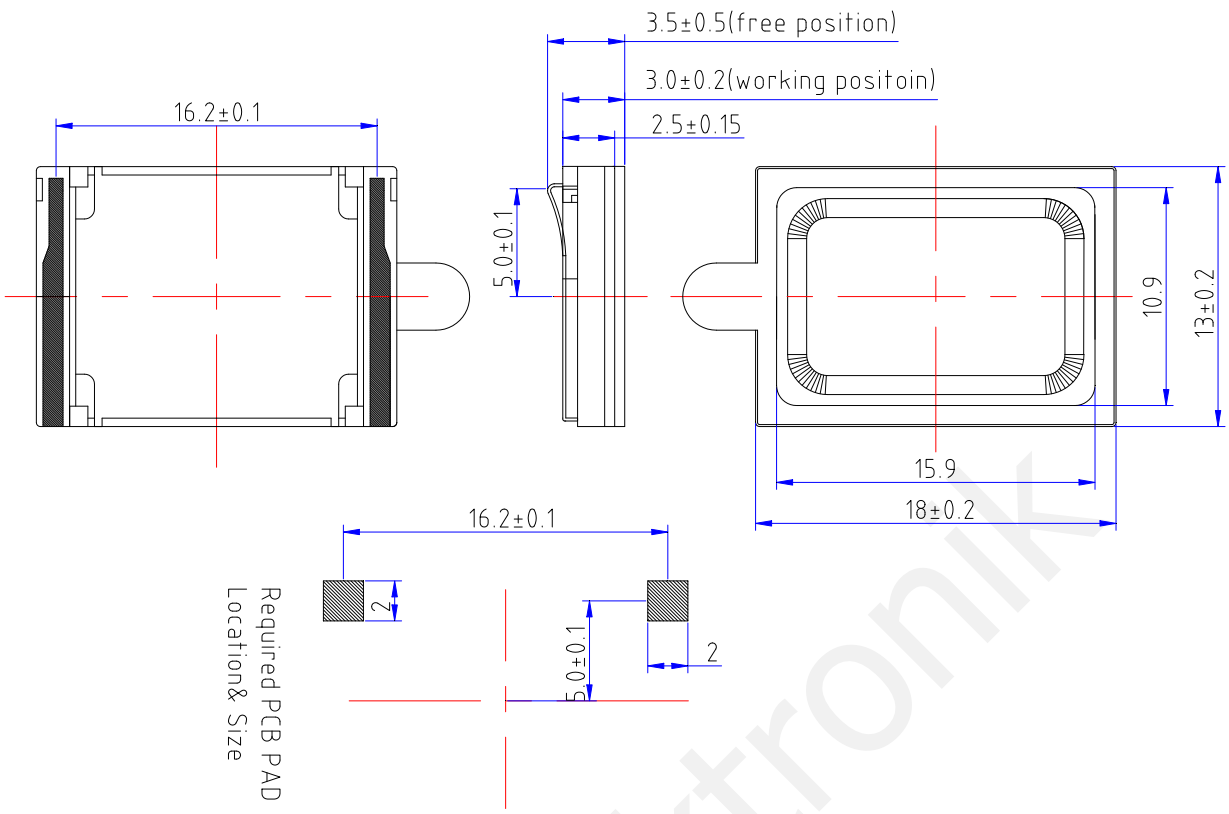

Bill of Material

ITEM	DESCRIPTIONS	REMARK	QTY	REMARK
8	DAMPER	PEI	1	
7	DUSTCAP	SUS	1	
6	FRAME	Fe	1	
5	VOICE COIL	Cu	1	
4	POLE PIECE	SPCC Zn PLATED	1	
3	MAGNET	Nd-Fe-B	1	
2	YOKE	Fe	1	
1	GASKOT	PBT	1	

PREPARED	CHECKED	APPROVED
Liu	*Wang*	*Li*

KAIBOER 深圳市凯博尔电子科技有限公司	SPECIFICATIONS		ITEM NO.	7/7
	MODEL NO.	KBE1318S3.0HT	SPEC. No	21060301

ems elektronik

PRODUCT PACKAGE (fig.5)

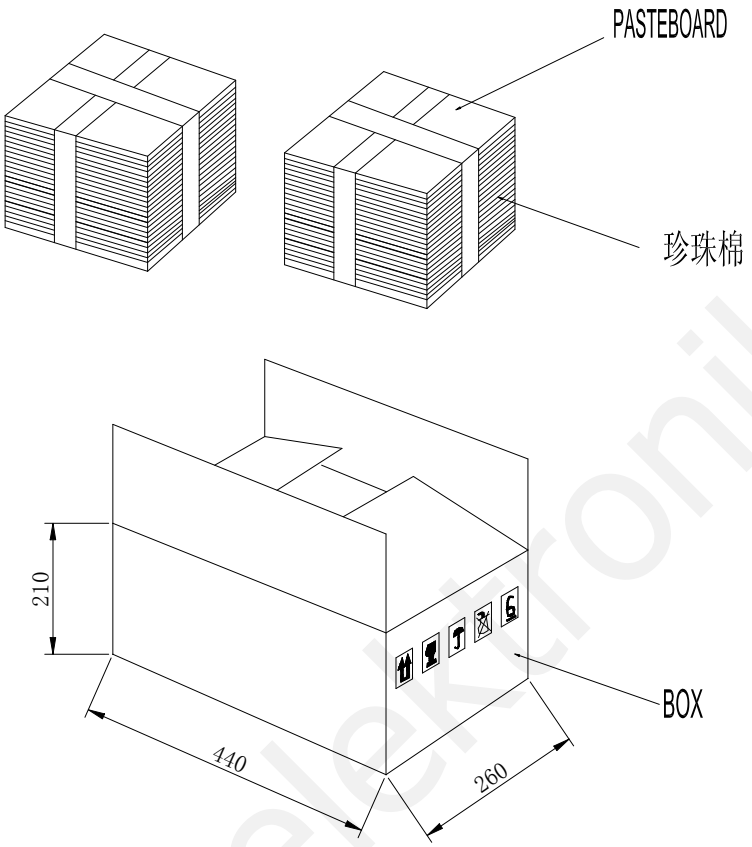

UNIT:MM

NOTES:

1. 100 PCS PER TRAY PE PAN.
2. 2000 PCS PER CARTONS.
3. 2 CARTONS PER BOX.
4. 2000 PCS PER BOX.

tam elektronik

PREPARED	CHECKED	APPROVED
Liu	*Wang*	*Li*