PANEL-MOUNT AMMETER RED

COMPACT DC CURRENT METER UP TO 20 A

SPECIAL FEATURES

- 0–20 A DC measuring range
- Supply voltage: 4 – 30 V DC
- Integrated calibration potentiometer
- Bright red LED display 0.56″ per digit
- 4-wire connection design
- Compact and robust housing

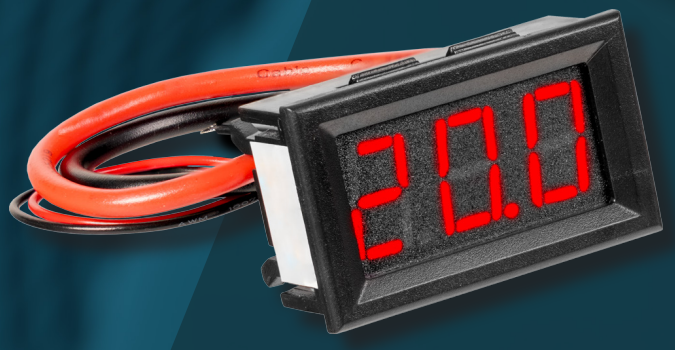

The COM-AM01 is a compact and versatile digital DC ammeter designed for precise and reliable current measurement in a wide range of low-voltage applications. Operating with a supply voltage between 4 and 30 V DC, it measures currents from 0 to 20 A DC with a fine resolution of 0.1 A, making it ideal for laboratories, mobile power systems, and custom electronic projects.

Equipped with a bright 0.56″ per digit red LED display featuring a 3-digit segment layout, the module offers excellent readability even in bright ambient light. The 500 ms refresh rate ensures a smooth and responsive display, while the ±1 % + 2 digits accuracy provides dependable measurement results.

A special highlight of the COM-AM01 is the integrated calibration potentiometer, which allows users to fine-tune and recalibrate the display for maximum precision. This feature makes the module especially valuable for long-term installations or applications where exact current values are critical.

The ammeter uses a four-wire connection system: two thicker leads (red and black) are dedicated to current measurement, while two thinner wires provide the power supply and ground reference. This separation minimizes measurement interference and ensures stable operation even under load variations.

With its robust and lightweight construction (28 g), wide operating temperature range (–10 °C to +65 °C), and compact dimensions (48 × 29 × 22 mm), the COM-AM01 is easy to integrate into control panels, power distribution boxes, laboratory instruments, and embedded systems.

Whether in industrial, automotive, or educational environments, the COM-AM01 delivers a cost-effective, space-saving, and highly accurate solution for monitoring DC currents — complemented by its user-adjustable calibration potentiometer for optimal long-term performance.

TECHNICAL SPECIFICATIONS

Operating voltage	4 - 30 V DC
Current measuring range	0 A - 20.0 A DC
Current resolution	0.1 A
Current measuring accuracy	± 1 % + 2 digits
Display size	0.56" per digit
Refresh rate	500 ms
Operating temperature	-10 to +65°C
Display mode	3-digit segment display
Display colour	Red
Cable length	14 cm
Special feature	Integrated calibration potentiometer

CABLE ASSIGNMENT

Thick red cable	Input current measurement
Thick black cable	Output current measurement
Thin red cable	Input supply voltage
Thin black cable	Ground supply voltage
	Output current measurement & Ground supply voltage are internally connected

ADDITIONAL INFORMATION

Weight	28 g
Dimensions	48 x 29 x 22 mm
Article no.	COM-AM01
Items shipped	1x Panel mount ampere meter, connection cables
Customs tariff number	90303370
EAN	4250236830865

TECHNICAL DRAWING

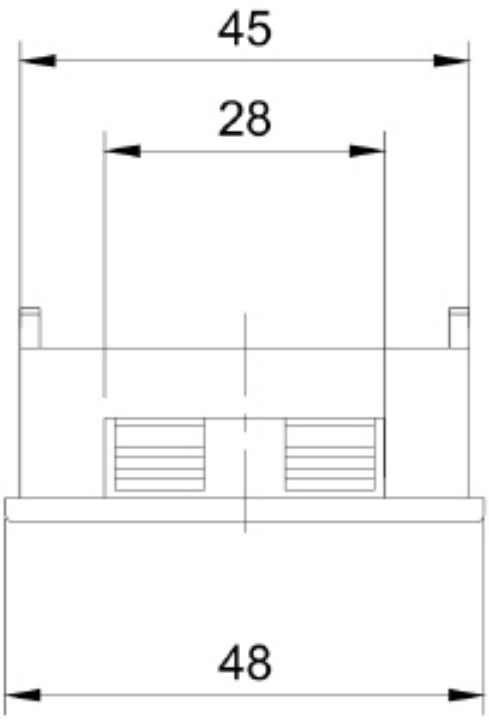

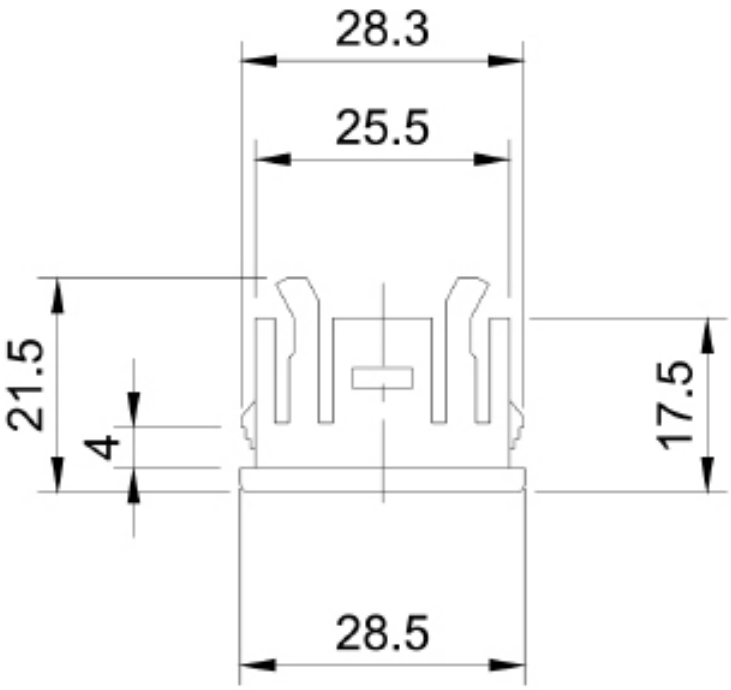

CONNECTION EXAMPLE

Operation via measuring voltage:

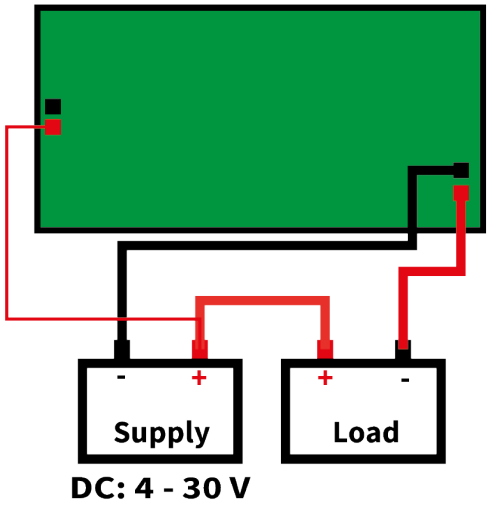

When operating via the measuring voltage, the thin black cable remains unconnected.
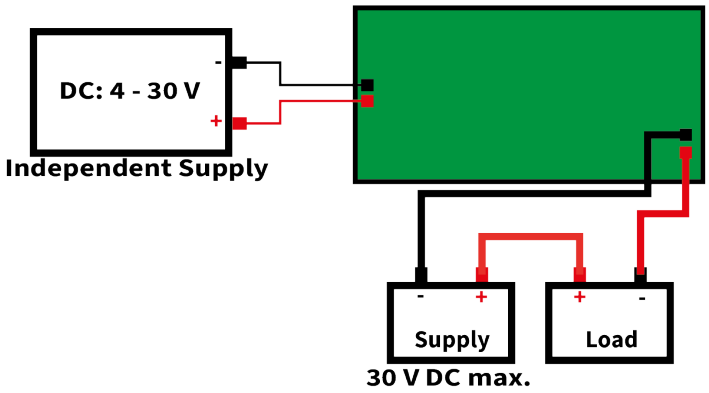
Operation with separate power supply: