BRUMBERG
Light. Since 1873.

TIRREL-R Recessed spot, GX5,3

Article no. 0063.07



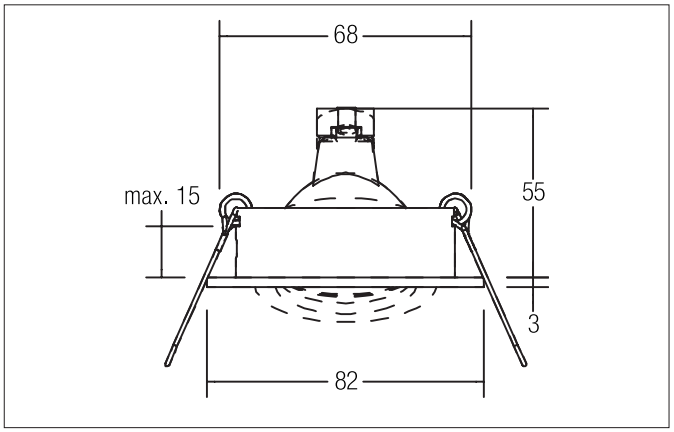

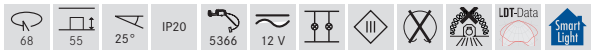

Tender

Recessed spot, GX5,3, white matt, Round. In a compact design, for installation in tool-less rapid assembly systems. Lamp holder: GX5.3, Mounting method: Recessed mounting, Place of installation: Ceiling-mounted, Material: Aluminium, Degree of protection: according to DIN EN 60529 IP20, Protection class: (EN 61140) III, Voltage: 12 V, Power: 13 W, Amount of light sources / fittings: 1 piece, Adjustability: Pivoted, without control gear, Dimmable: Depending on type of control gear, Type of dimming: Depending on driver.

Product Benefits

- Recessed spotlight in round shape made of solid aluminum.
  for LED retrofit lamps with base GX5,3.
- Ceiling cutout 68 mm, diameter 82 mm, installation depth 55 mm, IP20.
- Swivel range 25°.
- Large color variation. Without visible snap ring.
- Classic, formally restrained design.
- In the same look also available as GU10 version, as switchable and dimmable set (phase cut or DALI) and as a loudspeaker.
- In addition in the same surface structure and in the same color also available in square version.

All technical data as well as, weight and measurements are based on rated values and had been carefully prepared. We reserve the right to make technical changes which are are important in progressing. Product pictures are examples and can vary from the original. Subject to errors.
Date 04.02.2026 Orders are placed under our general terms and conditions under https://www.brumberg.com/en/terms-and-conditions/general-terms-and-conditions-of-sale/

BRUMBERG
Light. Since 1873.

TIRREL-R Recessed spot, GX5,3

Article no. 0063.07

Article data	
Article no.	0063.07
GTIN	4250047769200
Series name	TIRREL-R
Short description	Recessed spot, GX5,3
Material	Aluminium
Colour	white matt
Type of surface	Matt
Shape	Round
Outer diameter	82 mm
Built-in diameter min.	67 mm
Built-in diameter max.	68 mm
Installation depth	55 mm
Hight	3 mm
Weight	0.074 kg
D licence plate	No
Conformance	CE, UKCA

Operating technology of the luminaire	
System output	13 W
Voltage type	AC/DC
AC nominal voltage max	12 V
Frequency max	50 Hz
Lamp	For LED-retrofill lamp
Lamp holder	GX5.3
Protection class	III
Degree of protection	IP20
Dimmable	Depending on type of control gear
Control	Depending on driver
Bulb change possible	Yes
Energy efficiency class	not required

Mounting technology	
Mounting method	Recessed mounting
Place of installation	Ceiling-mounted
Adjustability	Pivoted
Swivel angle	25°
Max. ceiling thickness	15 mm
Further references	No cover with thermal insulation material Smarthome
Material cover	Without cover
Circlip	Without circlip

Packing data	
Gross weight	0.093 kg
Length of packaging	85 mm
Packaging width	35 mm
Packaging hight	84 mm
Disposal at end of life	This product must not be disposed of with household waste. You are obliged, to dispose of such electrical waste separately. By disposing of electrical waste and other old or defective electronics separately, you support recycling or other forms of re-use. In that way you help to take care and to avoid that harmful substances get into the environment.

All technical data as well as, weight and measurements are based on rated values and had been carefully prepared. We reserve the right to make technical changes which are are important in progressing. Product pictures are examples and can vary from the original. Subject to errors.
Date 04.02.2026 Orders are placed under our general terms and conditions under https://www.brumberg.com/en/terms-and-conditions/general-terms-and-conditions-of-sale/

BRUMBERG
Light. Since 1873.

TIRREL-R Recessed spot, GX5,3

Article no. 0063.07

Compatible LED-modu-							
Article no.	Power	Beam angle	Colour tempera-ture	Colour rende-ring		Input	Hight LED-Modul
12925003	3 W	38°	2.700 K	CRI > 80		350 mA	40 mm
12926003	3 W	38°	3.000 K	CRI > 80		350 mA	40 mm
12925004	3 W	38°	4.000 K	CRI > 80		350 mA	40 mm
12923383	6 W	38°	2.700 K	CRI > 80		350 mA	32 mm
12923603	6 W	60°	2.700 K	CRI > 80		350 mA	32 mm
12927383	6 W	38°	2.700 K	CRI > 90		350 mA	32 mm
12924383	6 W	38°	3.000 K	CRI > 80		350 mA	32 mm
12924603	6 W	60°	3.000 K	CRI > 80		350 mA	32 mm
12928383	6 W	38°	3.000 K	CRI > 90		350 mA	32 mm
12924384	6 W	38°	3.500 K	CRI > 80		350 mA	32 mm
12924604	6 W	60°	3.500 K	CRI > 80		350 mA	32 mm
12928384	6 W	38°	3.500 K	CRI > 90		350 mA	32 mm
12923384	6 W	38°	4.000 K	CRI > 80		350 mA	32 mm
12923604	6 W	60°	4.000 K	CRI > 80		350 mA	32 mm
12927384	6 W	38°	4.000 K	CRI > 90		350 mA	32 mm
12920183	6 W	18°	3.000 K	CRI > 80		350 mA	31 mm
12920243	6 W	24°	3.000 K	CRI > 80		350 mA	31 mm
12920003	6 W	38°	3.000 K	CRI > 80		350 mA	31 mm
12920603	6 W	60°	3.000 K	CRI > 80		350 mA	31 mm
12920184	6 W	18°	4.000 K	CRI > 80		350 mA	31 mm
12920244	6 W	24°	4.000 K	CRI > 80		350 mA	31 mm
12920004	6 W	38°	4.000 K	CRI > 80		350 mA	31 mm
12920604	6 W	60°	4.000 K	CRI > 80		350 mA	31 mm
12963383	6 W	38°	3.000 K - 1.800 K	CRI > 90		350 mA	32 mm
12963603	6 W	60°	3.000 K - 1.800 K	CRI > 90		350 mA	32 mm
12953003	12 W	38°	2.700 K	CRI > 80		350 mA	70 mm
12954003	12 W	38°	3.000 K	CRI > 80		350 mA	70 mm
12954004	12 W	38°	3.500 K	CRI > 80		350 mA	70 mm
12953004	12 W	38°	4.000 K	CRI > 80		350 mA	70 mm
12983003	12.5 W	38°	3.000 K	CRI > 97		350 mA	95 mm
12965003	12 W	38°	3.000 K - 1.800 K	CRI > 90		350 mA	70 mm
12823003	8 W	60°	2.850 K	CRI > 90		24.00 V	50 mm
12845604	8 W	60°	2.700 K - 6.500 K	CRI > 90		24.00 V	52 mm
18438002	8 W	60°	RGB+WW	CRI > 90		24.00 V	50 mm
12929503	6.3 W	50°	2.700 K / 3.000 K / 4.000 K	CRI > 80		350 mA	34 mm
12930503	5.9 W	50°	2.700 K / 3.000 K / 4.000 K	CRI > 90		350 mA	34 mm
12933553	6 W	55°	2.700 K / 3.000 K / 4.000 K + dim-2warm (3.000 K - 2.200 K)	CRI > 90		350 mA	32 mm

All technical data as well as, weight and measurements are based on rated values and had been carefully prepared. We reserve the right to make technical changes which are are important in progressing. Product pictures are examples and can vary from the original. Subject to errors.
Date 04.02.2026 Orders are placed under our general terms and conditions under https://www.brumberg.com/en/terms-and-conditions/general-terms-and-conditions-of-sale/

BRUMBERG
Light. Since 1873.

TIRREL-R Recessed spot, GX5,3
Article no. 0063.07

Optional accessories
Article no.: 81201370 Reducing ring D 110 mm, for luminaire cut-out size 68 mm Dimensions: 110 mm https://www.brumberg.com/fileadmin/products/Datenblatt_81201370_2021_DE.pdf
Article no.: 81202370 Reducing ring D 130 mm, for luminaire cut-out size 68 mm Dimensions: 130 mm https://www.brumberg.com/fileadmin/products/Datenblatt_81202370_2021_DE.pdf
Article no.: 81203370 Reducing ring D 145 mm, for luminaire cut-out size 68 mm Dimensions: 145 mm https://www.brumberg.com/fileadmin/products/Datenblatt_81203370_2021_DE.pdf
Article no.: 5366 Bracket with GX5.3 socket, with strain relief https://www.brumberg.com/fileadmin/products/Datenblatt_00536600_2021_DE.pdf
Article no.: 5358 Bracket with socket GZ10, with strain relief https://www.brumberg.com/fileadmin/products/Datenblatt_00535800_2021_DE.pdf
Article no.: 5327 Leaf spring set (2 pieces) https://www.brumberg.com/fileadmin/products/Datenblatt_00532700_2021_DE.pdf

All technical data as well as, weight and measurements are based on rated values and had been carefully prepared. We reserve the right to make technical changes which are are important in progressing. Product pictures are examples and can vary from the original. Subject to errors.
Date 04.02.2026 Orders are placed under our general terms and conditions under https://www.brumberg.com/en/terms-and-conditions/general-terms-and-conditions-of-sale/