BRUMBERG
Light. Since 1873.

BARENT LED recessed downlight

Article no. 12104173



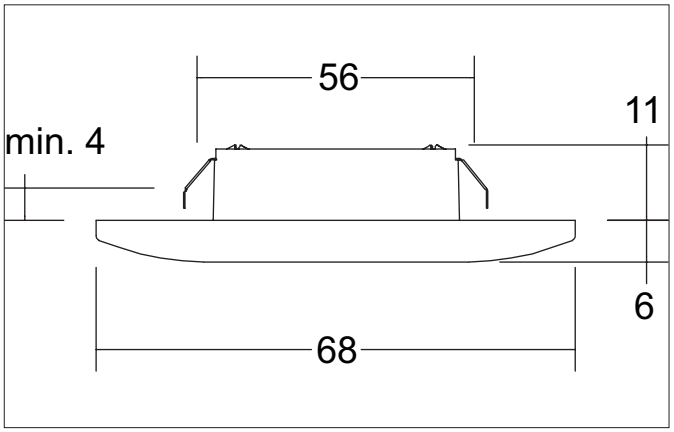



Tender
LED recessed downlight, Round.Toolless ceiling installation by leaf spring. Ceiling cut-out Ø 56 mm, Installation depth 11 mm, Outer diameter 69 mm, Weight 0,079 kg, Reflector silver with rotattionssymmetrical, deep, wide distributed light intensity. Cover plastic, transparent-Luminous flux 380 lm, Power 1 x 4 W, Light colour warm white, Correlated color temprature (CCT) 3.000 K, Colour rendering index CRI > 90, Housing material: Aluminium / Plastic, Colour: white structure, Permissible ambient temperature (ta): -20 °C up to +25 °C, Protection class (EN 61140): III, Degree of protection (DIN EN 60529): IP20. For connection to an external driver, which is not included in the scope of delivery of the luminaire. Depending on driver dimmable.

Product Benefits

- Round recessed downlight made of solid aluminum with polycarbonate cover.
- Protection class IP65 (for installation in closed ceilings).
- Simple and tool-free installation.
- CRI > 90.
- Low installation depth 35 mm, diameter 80 mm, Ceiling cut-out 68 mm.
- Maximum ceiling thickness 20 mm.
- Three surface finishes available.
- With integrated converter (DOB) for connection to 230 V mains voltage.
- Supplied with connection box for quick connection.
- Phase section dimmable.
- dim2warm version (3,000 K - 1,800 K): if the luminaire is dimmed dimmed, the color temperature is reduced.
- Also available in static 3,000 K.

All technical data as well as, weight and measurements are based on rated values and had been carefully prepared. We reserve the right to make technical changes which are are important in progressing. Product pictures are examples and can vary from the original. Subject to errors.
Date 26.11.2025 Orders are placed under our general terms and conditions under https://www.brumberg.com/en/terms-and-conditions/general-terms-and-conditions-of-sale/

BRUMBERG
Light. Since 1873.

BARENT LED recessed downlight

Article no. 12104173

Article data	
Article no.	12104173
GTIN	4255752519744
Series name	BARENT
Short description	LED recessed downlight
Material	Aluminium / Plastic
Colour	white structure
Type of surface	Structure
Shape	Round
Outer diameter	69 mm
Built-in diameter min.	56 mm
Built-in diameter max.	56 mm
Installation depth	11 mm
Hight	6 mm
Scope of delivery	inkl. Anschlußleitung 3.000 mm
Weight	0.079 kg
D licence plate	No
Conformance	CE, UKCA

Lighting technology	
Colour temperature	3.000 K
Light colour	white
Light output	Direct
Luminous flux	380 lm
System efficiency	95 lm/W
Colour rendering	CRI > 90
Reflector	Faceted
Reflector colour	silver
Beam angle	60°
Light sharing	Symmetric
Adjustable color temperature	No

Operating technology of the luminaire	
System output	4 W
Voltage type	DC
Current	350 mA
Lamp	LED
Lamp holder	Without fitting
Protection class	III
Degree of protection	IP20
Dimmable	Depending on type of control gear
Control	Depending on driver
Bulb change possible	The light source of this luminaire may only be replaced by the manufacturer or a service technician commissioned by him or a similarly qualified person.
Energy efficiency class	not required

Mounting technology	
Mounting method	Recessed mounting
Place of installation	Ceiling-mounted
Adjustability	Not adjustable
Further references	No cover with thermal insulation material
Material cover	Plastic, transparent
Suitable for through-wiring	Yes, with optional accessories

All technical data as well as, weight and measurements are based on rated values and had been carefully prepared. We reserve the right to make technical changes which are are important in progressing. Product pictures are examples and can vary from the original. Subject to errors.
Date 26.11.2025 Orders are placed under our general terms and conditions under https://www.brumberg.com/en/terms-and-conditions/general-terms-and-conditions-of-sale/

BRUMBERG
Light. Since 1873.

BARENT LED recessed downlight
Article no. 12104173

Packing data	
Gross weight	0.104 kg
Length of packaging	90 mm
Packaging width	90 mm
Packaging hight	40 mm
Disposal at end of life	This product must not be disposed of with household waste. You are obliged, to dispose of such electrical waste separately. By disposing of electrical waste and other old or defective electronics separately, you support recycling or other forms of re-use. In that way you help to take care and to avoid that harmful substances get into the environment.

Required accessories
Article no.: 17662010 LED converter 350 mA, on/off switchable Power: 1 - 7,2 W, ohne Konfektionierung Dimensions: 35 mm x 21 mm https://www.brumberg.com/fileadmin/products/Datenblatt_17662010_2021_DE.pdf
Article no.: 17613010 LED converter 350 mA, on/off switchable Power: 1 - 15 W, ohne Konfektionierung Dimensions: 115 mm x 34 mm x 19 mm https://www.brumberg.com/fileadmin/products/Datenblatt_17613010_2021_DE.pdf
Article no.: 17621010 LED converter 350 mA, on/off switchable Power: 1 - 21 W, ohne Konfektionierung Dimensions: 128 mm x 50 mm x 13 mm https://www.brumberg.com/fileadmin/products/Datenblatt_17621010_2021_DE.pdf
Article no.: 17663010 LED converter 350 mA, trailing-edge phase dimmable Power: 2,8 - 7 W, ohne Konfektionierung Dimensions: 110 mm x 50 mm x 19 mm https://www.brumberg.com/fileadmin/products/Datenblatt_17663010_2021_DE.pdf
Article no.: 17648010 LED converter 350 mA, trailing-edge phase dimmable Power: 0,7 - 17 W, ohne Konfektionierung Dimensions: 166 mm x 46 mm x 34 mm https://www.brumberg.com/fileadmin/products/Datenblatt_17648010_2021_DE.pdf
Article no.: 17684010 LED converter 350 mA, DALI dimmable (digital) Power: 2,8 - 7 W, ohne Konfektionierung Dimensions: 130 mm x 42 mm x 22 mm https://www.brumberg.com/fileadmin/products/Datenblatt_17684010_2021_DE.pdf
Article no.: 17658010 LED round converter 350 mA, DALI dimmable (digital) Power: 2,1 - 9 W, ohne Konfektionierung Dimensions: 56 mm x 25 mm https://www.brumberg.com/fileadmin/products/Datenblatt_17658010_2021_DE.pdf

All technical data as well as, weight and measurements are based on rated values and had been carefully prepared. We reserve the right to make technical changes which are are important in progressing. Product pictures are examples and can vary from the original. Subject to errors.
Date 26.11.2025 Orders are placed under our general terms and conditions under https://www.brumberg.com/en/terms-and-conditions/general-terms-and-conditions-of-sale/

BRUMBERG
Light. Since 1873.

BARENT LED recessed downlight
Article no. 12104173

Optional accessories
Article no.: 83330000 Connection box 230 V AC, 3-pole Dimensions: 85 mm x 35 mm x 30 mm https://www.brumberg.com/fileadmin/products/Datenblatt_83330000_2021_DE.pdf
Article no.: 83331000 Connection box 230 V AC, 5-pole (DALI / 1-10 V) Dimensions: 90 mm x 52 mm x 30 mm https://www.brumberg.com/fileadmin/products/Datenblatt_83331000_2021_DE.pdf

All technical data as well as, weight and measurements are based on rated values and had been carefully prepared. We reserve the right to make technical changes which are are important in progressing. Product pictures are examples and can vary from the original. Subject to errors.
Date 26.11.2025 Orders are placed under our general terms and conditions under https://www.brumberg.com/en/terms-and-conditions/general-terms-and-conditions-of-sale/