BRUMBERG
Light. Since 1873.

DOLOK-S LED surface-mounted ceiling downlight, trailing edge dimmable

Article no. 12126183



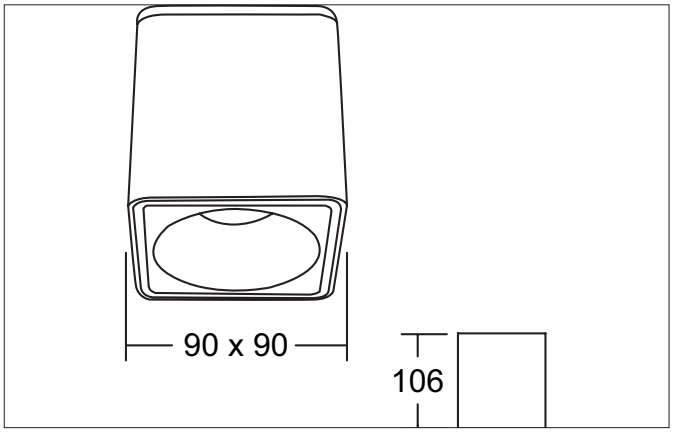

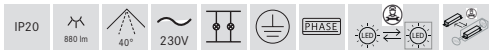

Tender
LED surface-mounted ceiling downlight, trailing edge dimmable, Square.Luminaire length 90.0 mm, Luminaire width 90.0 mm, Hight 106.0 mm Weight 0.662 kg,Reflector silver with rotattionssymmetrical, deep, wide distributed light intensity. Cover plastic, structuredLuminous flux 880 lm, Power 1 x 14,6 W, Light colour warm white, Correlated color temprature (CCT) 3.000 K, Colour rendering index CRI 83, Housing material: Aluminium / PMMA, Colour: black structure, Permissible ambient temperature (ta): -20 °C up to +25 °C, Protection class (EN 61140): I, Degree of protection (DIN EN 60529): IP20. With electronic driver, Trailing-edge phase dimmable.

Product Benefits

- Standard indirect component in white, can be retrofitted individually as accessories available in amber, blue and red.
- Easy installation due to bayonet mounting and arrestor cable.
- Luminaire can be easily removed without screws due to separate mounting plate.
- Three sizes: 330 mm, 440 mm or 550 mm.
- Three on-site adjustable light colors: 3,000 K, 4,000 K and 6,000 K.
- As an additional function: light color adjustable on the switch side via bottom-switch function.
- Also available as pendant version (accessory: pendant set 1,500 mm).
- Dimmable as standard via phase cut-off or DALI (size: 440 mm and 550mm).

All technical data as well as, weight and measurements are based on rated values and had been carefully prepared. We reserve the right to make technical changes which are are important in progressing. Product pictures are examples and can vary from the original. Subject to errors.
Date 07.04.2026 Orders are placed under our general terms and conditions under https://www.brumberg.com/en/terms-and-conditions/general-terms-and-conditions-of-sale/

BRUMBERG
Light. Since 1873.

DOLOK-S LED surface-mounted ceiling downlight, trailing edge dimmable

Article no. 12126183

Article data	
Article no.	12126183
GTIN	4255752519881
Series name	DOLOK-S
Short description	LED surface-mounted ceiling downlight, trailing edge dimmable
Material	Aluminium / PMMA
Colour	black structure
Type of surface	Structure
Shape	Square
Length	90 mm
Width	90 mm
Hight	106 mm
Weight	0.662 kg
D licence plate	No
Conformance	CE, UKCA

Lighting technology	
Colour temperature	3.000 K
Light colour	white
Light output	Direct/Indirect
Luminous flux	880 lm
System efficiency	60 lm/W
Colour rendering	CRI 83
Reflector	Faceted
Reflector colour	silver
Beam angle	40°
Light sharing	Symmetric
Adjustable color temperature	No

Operating technology of the luminaire	
System output	14.6 W
Voltage type	AC
AC nominal voltage max	230 V
Frequency max	50 Hz
Lamp	LED
Lamp holder	LED
Protection class	I
Degree of protection	IP20
Dimmable	Yes
Control	Trailing-edge phase
Bulb change possible	The light source of this luminaire may only be replaced by the manufacturer or a service technician commissioned by him or a similarly qualified person.
Energy efficiency class	not required

Mounting technology	
Mounting method	Surface mounting
Place of installation	Ceiling-mounted
Adjustability	Not adjustable
Cover	Plastic, structured

All technical data as well as, weight and measurements are based on rated values and had been carefully prepared. We reserve the right to make technical changes which are are important in progressing. Product pictures are examples and can vary from the original. Subject to errors.
Date 07.04.2026 Orders are placed under our general terms and conditions under https://www.brumberg.com/en/terms-and-conditions/general-terms-and-conditions-of-sale/

BRUMBERG
Light. Since 1873.

DOLOK-S LED surface-mounted ceiling downlight, trailing edge dimmable
Article no. 12126183

Packing data	
Gross weight	0.715 kg
Length of packaging	100 mm
Packaging width	100 mm
Packaging hight	135 mm
Disposal at end of life	This product must not be disposed of with household waste. You are obliged, to dispose of such electrical waste separately. By disposing of electrical waste and other old or defective electronics separately, you support recycling or other forms of re-use. In that way you help to take care and to avoid that harmful substances get into the environment.

All technical data as well as, weight and measurements are based on rated values and had been carefully prepared. We reserve the right to make technical changes which are are important in progressing. Product pictures are examples and can vary from the original. Subject to errors.
Date 07.04.2026 Orders are placed under our general terms and conditions under https://www.brumberg.com/en/terms-and-conditions/general-terms-and-conditions-of-sale/