BRUMBERG
Light. Since 1873.

NAVARINO LED Recessed spotlight, rotatable and swivelling

Article no. 12356173



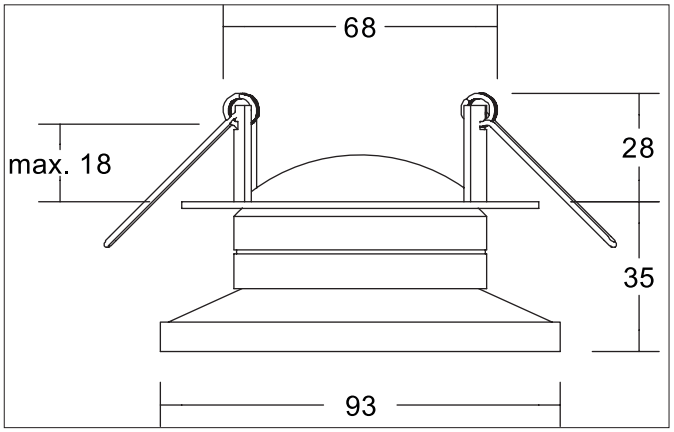

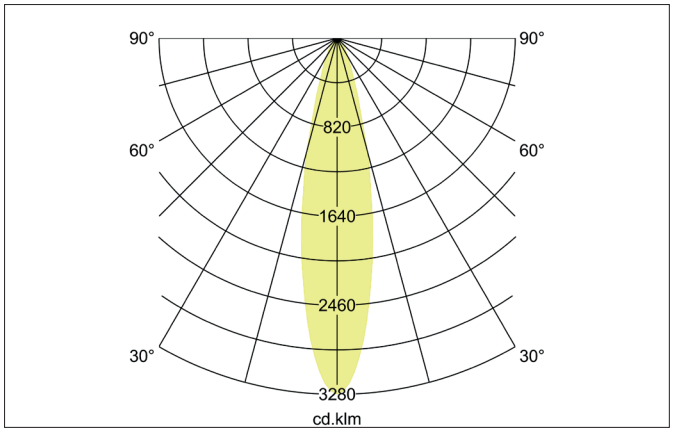



Tender

LED Recessed spotlight, rotatable and swivelling, Round.Toolless ceiling installation by installation springs. Ceiling cut-out Ø 68 mm, Installation depth 28 mm, Outer diameter 93 mm, Weight 0,228 kg, with rotattionssymmetrical, deep, wide distributed light intensity. Cover plastic, structuredLuminous flux 510 lm, Power 1 x 6 W, Light colour warm white, Correlated color temprature (CCT) 3.000 K, Colour rendering index CRI > 80, Rated life time L70/B50 at 25 °C: 50.000 h, Housing material: Aluminium / PMMA, Colour: white structure, Permissible ambient temperature (ta): -20 °C up to +25 °C, Protection class (EN 61140): III, Degree of protection (DIN EN 60529): IP20. For connection to an external driver, which is not included in the scope of delivery of the luminaire. Depending on driver dimmable.

Product Benefits

- Round recessed spotlight made of solid aluminum.
- Surprising, fresh design with direct and indirect components.
- Ceiling cut-out 68 mm, outer diameter 93 mm,
  installation depth 40 mm, luminous flux 510 lm, IP20.
- LED module can be rotated (355°) and swiveled (40°).
- Dimmable when using a suitable converter.

All technical data as well as, weight and measurements are based on rated values and had been carefully prepared. We reserve the right to make technical changes which are are important in progressing. Product pictures are examples and can vary from the original. Subject to errors.
Date 21.11.2025 Orders are placed under our general terms and conditions under https://www.brumberg.com/en/terms-and-conditions/general-terms-and-conditions-of-sale/

BRUMBERG
Light. Since 1873.

NAVARINO LED Recessed spotlight, rotatable and swivelling

Article no. 12356173

Article data	
Article no.	12356173
GTIN	4255752501046
Series name	NAVARINO
Short description	LED Recessed spotlight, rotatable and swivelling
Material	Aluminium / PMMA
Colour	white structure
Type of surface	Structure
Shape	Round
Outer diameter	93 mm
Built-in diameter min.	68 mm
Built-in diameter max.	68 mm
Installation depth	28 mm
Hight	35 mm
Weight	0.228 kg
D licence plate	No
Conformance	CE, UKCA

Lighting technology	
Colour temperature	3.000 K
Light colour	white
Light output	Direct/Indirect
Luminous flux	510 lm
System efficiency	85 lm/W
Colour rendering	CRI > 80
Reflector	Without
Beam angle	24°
Light sharing	Symmetric
Adjustable color temperature	No

Operating technology of the luminaire	
System output	6 W
Voltage type	DC
Current	350 mA
Lamp	LED
Lamp holder	Plug&Play
Protection class	III
Degree of protection	IP20
Dimmable	Depending on type of control gear
Control	Depending on driver
Bulb change possible	The light source of this luminaire may only be replaced by the manufacturer or a service technician commissioned by him or a similarly qualified person.
Rated life time L70/B50 at 25 °C	50,000 h
Energy efficiency class	not required

Mounting technology	
Mounting method	Recessed mounting
Place of installation	Ceiling-mounted
Adjustability	Rotable and pivoted
Swivel angle	40°
Rotation angle	355°
Max. ceiling thickness	18 mm
Further references	No cover with thermal insulation material
Material cover	Plastic, structured
Circlip	Without circlip
Suitable for through-wiring	Yes, with optional accessories

All technical data as well as, weight and measurements are based on rated values and had been carefully prepared. We reserve the right to make technical changes which are are important in progressing. Product pictures are examples and can vary from the original. Subject to errors.
Date 21.11.2025 Orders are placed under our general terms and conditions under https://www.brumberg.com/en/terms-and-conditions/general-terms-and-conditions-of-sale/

BRUMBERG
Light. Since 1873.

NAVARINO LED Recessed spotlight, rotatable and swivelling
Article no. 12356173

Packing data	
Gross weight	0.29 kg
Length of packaging	130 mm
Packaging width	100 mm
Packaging hight	80 mm
Disposal at end of life	This product must not be disposed of with household waste. You are obliged, to dispose of such electrical waste separately. By disposing of electrical waste and other old or defective electronics separately, you support recycling or other forms of re-use. In that way you help to take care and to avoid that harmful substances get into the environment.

All technical data as well as, weight and measurements are based on rated values and had been carefully prepared. We reserve the right to make technical changes which are are important in progressing. Product pictures are examples and can vary from the original. Subject to errors.
Date 21.11.2025 Orders are placed under our general terms and conditions under https://www.brumberg.com/en/terms-and-conditions/general-terms-and-conditions-of-sale/

BRUMBERG
Light. Since 1873.

NAVARINO LED Recessed spotlight, rotatable and swivelling
Article no. 12356173

Required accessories
Article no.: 17662000 LED converter 350 mA, on/off switchable Power: 1 - 7,2 W, Plug&Play Dimensions: 68 mm x 35 mm x 21 mm https://www.brumberg.com/fileadmin/products/Datenblatt_17662000_2021_DE.pdf
Article no.: 17662020 LED converter 350 mA, on/off switchable Power: 1 - 7,2 W, Plug&Play + Anschlussbox Dimensions: 35 mm x 21 mm https://www.brumberg.com/fileadmin/products/Datenblatt_17662020_2021_DE.pdf
Article no.: 17663000 LED converter 350 mA, trailing-edge phase dimmable Power: 2,8 - 7 W, Plug&Play Dimensions: 110 mm x 50 mm x 19 mm https://www.brumberg.com/fileadmin/products/Datenblatt_17663000_2021_DE.pdf
Article no.: 17663020 LED converter 350 mA, trailing-edge phase dimmable Power: 2,8 - 7 W, Plug&Play + Anschlussbox Dimensions: 110 mm x 50 mm x 19 mm https://www.brumberg.com/fileadmin/products/Datenblatt_17663020_2021_DE.pdf
Article no.: 17613000 LED converter 350 mA, on/off switchable Power: 1 - 15 W, Plug&Play Dimensions: 115 mm x 34 mm x 19 mm https://www.brumberg.com/fileadmin/products/Datenblatt_17613000_2021_DE.pdf
Article no.: 17613020 LED converter 350 mA, on/off switchable Power: 1 - 15 W, Plug&Play + Anschlussbox Dimensions: 115 mm x 34 mm x 19 mm https://www.brumberg.com/fileadmin/products/Datenblatt_17613020_2021_DE.pdf
Article no.: 17621000 LED converter 350 mA, on/off switchable Power: 1 - 21 W, Plug&Play Dimensions: 128 mm x 50 mm x 13 mm https://www.brumberg.com/fileadmin/products/Datenblatt_17621000_2021_DE.pdf
Article no.: 17621020 LED converter 350 mA, on/off switchable Power: 1 - 21 W, Plug&Play + Anschlussbox Dimensions: 128 mm x 50 mm x 13 mm https://www.brumberg.com/fileadmin/products/Datenblatt_17621020_2021_DE.pdf
Article no.: 17652000 LED-round converter 350 mA, trailing-edge phase dimmer Power: 4,9 - 7 W, Plug&Play Dimensions: 51 mm x 24 mm https://www.brumberg.com/fileadmin/products/Datenblatt_17652000_2021_DE.pdf
Article no.: 17652020 LED-round converter 350 mA, trailing-edge phase dimmer Power: 4,9 - 7 W, Plug&Play + Anschlussbox Dimensions: 51 mm x 24 mm https://www.brumberg.com/fileadmin/products/Datenblatt_17652020_2021_DE.pdf

All technical data as well as, weight and measurements are based on rated values and had been carefully prepared. We reserve the right to make technical changes which are are important in progressing. Product pictures are examples and can vary from the original. Subject to errors.
Date 21.11.2025 Orders are placed under our general terms and conditions under https://www.brumberg.com/en/terms-and-conditions/general-terms-and-conditions-of-sale/

BRUMBERG
Light. Since 1873.

NAVARINO LED Recessed spotlight, rotatable and swivelling
Article no. 12356173

Required accessories
Article no.: 17640000 LED converter 350 mA, trailing-edge phase dimmable Power: 4,2 - 10 W, Plug&Play Dimensions: 102 mm x 38 mm x 21 mm https://www.brumberg.com/fileadmin/products/Datenblatt_17640000_2021_DE.pdf
Article no.: 17640020 LED converter 350 mA, trailing-edge phase dimmable Power: 4,2 - 10 W, Plug&Play + Anschlussbox Dimensions: 102 mm x 38 mm x 21 mm https://www.brumberg.com/fileadmin/products/Datenblatt_17640020_2021_DE.pdf
Article no.: 17648000 LED converter 350 mA, trailing-edge phase dimmable Power: 0,7 - 17 W, Plug&Play Dimensions: 166 mm x 46 mm x 34 mm https://www.brumberg.com/fileadmin/products/Datenblatt_17648000_2021_DE.pdf
Article no.: 17648020 LED converter 350 mA, trailing-edge phase dimmable Power: 0,7 - 17 W, Plug&Play + Anschlussbox Dimensions: 166 mm x 46 mm x 34 mm https://www.brumberg.com/fileadmin/products/Datenblatt_17648020_2021_DE.pdf
Article no.: 17657000 LED converter 350 mA, 1-10 V dimmable (analog) Power: 5,2 - 18 W, Plug&Play Dimensions: 110 mm x 52 mm x 22 mm https://www.brumberg.com/fileadmin/products/Datenblatt_17657000_2021_DE.pdf
Article no.: 17682000 LED converter 350 mA, DALI dimmable (digital) Power: 1,8 - 18,5 W, Plug&Play Dimensions: 146.5 mm x 43.5 mm x 22 mm https://www.brumberg.com/fileadmin/products/Datenblatt_17682000_2021_DE.pdf
Article no.: 17682020 LED converter 350 mA, DALI dimmable (digital) Power: 1,8 - 18,5 W, Plug&Play + Anschlussbox Dimensions: 146.5 mm x 43.5 mm x 22 mm https://www.brumberg.com/fileadmin/products/Datenblatt_17682020_2021_DE.pdf
Article no.: 17683000 LED converter 350 mA, DALI dimmable (digital) Power: 3,5 - 17 W, Plug&Play Dimensions: 110.5 mm x 52 mm x 22 mm https://www.brumberg.com/fileadmin/products/Datenblatt_17683000_2021_DE.pdf
Article no.: 17683020 LED converter 350 mA, DALI dimmable (digital) Power: 3,5 - 17 W, Plug&Play + Anschlussbox Dimensions: 110.5 mm x 52 mm x 22 mm https://www.brumberg.com/fileadmin/products/Datenblatt_17683020_2021_DE.pdf
Article no.: 17684000 LED converter 350 mA, DALI dimmable (digital) Power: 2,8 - 7 W, Plug&Play Dimensions: 130 mm x 42 mm x 22 mm https://www.brumberg.com/fileadmin/products/Datenblatt_17684000_2021_DE.pdf

All technical data as well as, weight and measurements are based on rated values and had been carefully prepared. We reserve the right to make technical changes which are are important in progressing. Product pictures are examples and can vary from the original. Subject to errors.
Date 21.11.2025 Orders are placed under our general terms and conditions under https://www.brumberg.com/en/terms-and-conditions/general-terms-and-conditions-of-sale/

BRUMBERG
Light. Since 1873.

NAVARINO LED Recessed spotlight, rotatable and swivelling
Article no. 12356173

Required accessories
Article no.: 17684020 LED converter 350 mA, DALI dimmable (digital) Power: 2,8 - 7 W, Plug&Play + Anschlussbox Dimensions: 130 mm x 42 mm x 22 mm https://www.brumberg.com/fileadmin/products/Datenblatt_17684020_2021_DE.pdf
Article no.: 17658000 LED round converter 350 mA, DALI dimmable (digital) Power: 2,1 - 9 W, Plug&Play Dimensions: 56 mm x 25 mm https://www.brumberg.com/fileadmin/products/Datenblatt_17658000_2021_DE.pdf
Article no.: 17658020 LED round converter 350 mA, DALI dimmable (digital) Power: 2,1 - 9 W, Plug&Play + Anschlussbox Dimensions: 56 mm x 25 mm https://www.brumberg.com/fileadmin/products/Datenblatt_17658020_2021_DE.pdf
Article no.: 17671000 LED converter 350mA, ZigBee dimmable Power: 3,5 - 18,5 W, Plug&Play Dimensions: 146.5 mm x 44 mm x 30 mm https://www.brumberg.com/fileadmin/products/Datenblatt_17671000_2021_DE.pdf
Article no.: 17671020 LED converter 350mA, ZigBee dimmable Power: 3,5 - 18,5 W, Plug&Play + Anschlussbox Dimensions: 146.5 mm x 44 mm x 30 mm https://www.brumberg.com/fileadmin/products/Datenblatt_17671020_2021_DE.pdf
Article no.: 17672000 LED converter 350mA, Casambi dimmable Power: 3,5 - 18,5 W, Plug&Play Dimensions: 146.5 mm x 44 mm x 30 mm https://www.brumberg.com/fileadmin/products/Datenblatt_17672000_2021_DE.pdf
Article no.: 17672020 LED converter 350mA, Casambi dimmable Power: 3,5 - 18,5 W, Plug&Play + Anschlussbox Dimensions: 146.5 mm x 44 mm x 30 mm https://www.brumberg.com/fileadmin/products/Datenblatt_17672020_2021_DE.pdf

All technical data as well as, weight and measurements are based on rated values and had been carefully prepared. We reserve the right to make technical changes which are are important in progressing. Product pictures are examples and can vary from the original. Subject to errors.
Date 21.11.2025 Orders are placed under our general terms and conditions under https://www.brumberg.com/en/terms-and-conditions/general-terms-and-conditions-of-sale/

BRUMBERG
Light. Since 1873.

NAVARINO LED Recessed spotlight, rotatable and swivelling
Article no. 12356173

Optional accessories
Article no.: 81201170 Reducing ring D 110 mm, for luminaire cut-out size 68 mm Dimensions: 110 mm https://www.brumberg.com/fileadmin/products/Datenblatt_81201170_2021_DE.pdf
Article no.: 81202170 Reducing ring D 130 mm, for luminaire cut-out size 68 mm Dimensions: 130 mm https://www.brumberg.com/fileadmin/products/Datenblatt_81202170_2021_DE.pdf
Article no.: 81203170 Reducing ring D 145 mm, for luminaire cut-out size 68 mm Dimensions: 145 mm https://www.brumberg.com/fileadmin/products/Datenblatt_81203170_2021_DE.pdf
Article no.: 3835 Plug & Play extension lead 350 mA Dimensions: 500 mm https://www.brumberg.com/fileadmin/products/Datenblatt_00003835_2021_DE.pdf
Article no.: 3836 Plug & Play extension lead 350 mA Dimensions: 1,000 mm https://www.brumberg.com/fileadmin/products/Datenblatt_00003836_2021_DE.pdf
Article no.: 3837 Plug & Play extension lead 350 mA Dimensions: 2,000 mm https://www.brumberg.com/fileadmin/products/Datenblatt_00003837_2021_DE.pdf
Article no.: 5327 Leaf spring set https://www.brumberg.com/fileadmin/products/Datenblatt_00532700_2021_DE.pdf

All technical data as well as, weight and measurements are based on rated values and had been carefully prepared. We reserve the right to make technical changes which are are important in progressing. Product pictures are examples and can vary from the original. Subject to errors.
Date 21.11.2025 Orders are placed under our general terms and conditions under https://www.brumberg.com/en/terms-and-conditions/general-terms-and-conditions-of-sale/