BRUMBERG
Light. Since 1873.

MUNA MICRO LED recessed downlight, 3CCT, UGR < 19, trailing edge dimmable, reflector silver, bevelled

Article no. 12563073



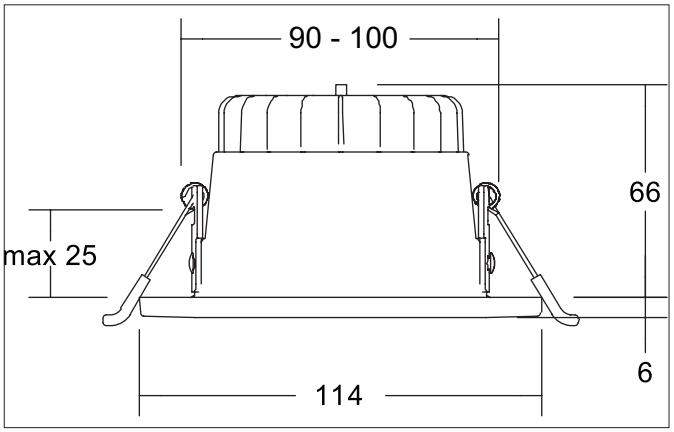

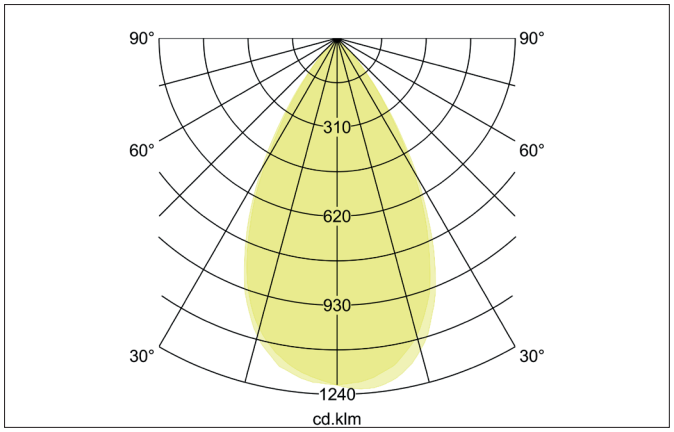

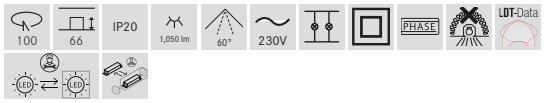

Tender

LED recessed downlight, 3CCT, UGR < 19, trailing edge dimmable, reflector silver, bevelled, Round.Toolless ceiling installation by installation springs. Ceiling cut-out Ø 100 mm, Installation depth 66 mm, Outer diameter 114 mm, Weight 0,225 kg, Reflector silver with rotattionssymmetrical, deep, wide distributed light intensity. Cover polycarbonat opalLuminous flux 940 - 1.050 lm, UGR < 19, Power 1 x 10 W, Light colour warm white to daylight white, Correlated color temprature (CCT) 3.000 - 5.700 K, Colour rendering index CRI > 80, Rated life time L70/B10 at 25 °C: 80.000 h, Rated life time L70/B50 at 25 °C: 50.000 h, Rated life time L80/B50 at 25 °C: 50.000 h, Housing material: Aluminium / Polycarbonate / Steel, Colour: white matt, Permissible ambient temperature (ta): -20 °C up to +25 °C, Protection class (EN 61140): II, Degree of protection (DIN EN 60529): IP20. With electronic driver, Trailing-edge phase dimmable.

All technical data as well as, weight and measurements are based on rated values and had been carefully prepared. We reserve the right to make technical changes which are are important in progressing. Product pictures are examples and can vary from the original. Subject to errors.
Date 18.06.2026 Orders are placed under our general terms and conditions under https://www.brumberg.com/en/terms-and-conditions/general-terms-and-conditions-of-sale/

BRUMBERG
Light. Since 1873.

MUNA MICRO LED recessed downlight, 3CCT, UGR < 19, trailing edge dimmable, reflector silver, bevelled

Article no. 12563073

Product Benefits

- Round recessed downlight made of aluminum with generously dimensioned thermal management.
- 3CCT: 3,000 K, 4,000 K or 5,700 K adjustable.
- High-quality aluminum reflector with lens.
- Simple and tool-free installation.
- UGR < 19.
- Low installation depth of 66 mm, diameter of 114 mm, Ceiling cut-out 90-100 mm.
- Phase section dimmable.
- Cover ring removable and replaceable with black ring (separate accessory).
- Ring in round black or round white also with additional, suspended float glass (partially frosted) (separate accessory).
- Cover frame also available in square in black or white instead of round instead of round (separate accessories).

Article data	
Article no.	12563073
GTIN	4255752500858
Series name	MUNA MICRO
Short description	LED recessed downlight, 3CCT, UGR < 19, trailing edge dimmable, reflector silver, bevelled
Material	Aluminium / Polycarbonate / Steel
Colour	white matt
Type of surface	Matt
Shape	Round
Outer diameter	114 mm
Built-in diameter min.	90 mm
Built-in diameter max.	100 mm
Installation depth	66 mm
Hight	6 mm
Scope of delivery	incl. converter for connection to 230 V mains voltage, phase cut-off dimmable with switch for color temperature selection: 3,000 K / 4,000 K / 5,700 K
Weight	0.225 kg
D licence plate	No
Conformance	CE, UKCA

Lighting technology	
Colour temperature	3.000 K / 4.000 K / 5.700 K
Color Temperature 1	3,000 K
Color Temperature 2	4,000 K
Color Temperature 3	5,700 K
Light output	Direct
Luminous flux	940 - 1,050 lm
Luminous flux 1	940 lm
Luminous flux 2	1,050 lm
Luminous flux 3	990 lm
System efficiency	105 lm/W
Colour rendering	CRI > 80
Reflector	Faceted
Reflector colour	silver
Beam angle	60°
Glare evaluation	UGR < 19
Light sharing	Symmetric
Adjustable color temperature	Stages

All technical data as well as, weight and measurements are based on rated values and had been carefully prepared. We reserve the right to make technical changes which are are important in progressing. Product pictures are examples and can vary from the original. Subject to errors.
Date 18.06.2026 Orders are placed under our general terms and conditions under https://www.brumberg.com/en/terms-and-conditions/general-terms-and-conditions-of-sale/

BRUMBERG
Light. Since 1873.

MUNA MICRO LED recessed downlight, 3CCT, UGR < 19, trailing edge dimmable, reflector silver, bevelled

Article no. 12563073

Operating technology of the luminaire	
System output	10 W
Voltage type	AC
AC nominal voltage max	230 V
Frequency max	50 Hz
Lamp	LED
Protection class	II
Degree of protection	IP20
Dimmable	Yes
Control	Trailing-edge phase
Bulb change possible	The light source of this luminaire may only be replaced by the manufacturer or a service technician commissioned by him or a similarly qualified person.
Rated life time L70/B50 at 25 °C	50,000 h
Rated life time L80/B50 at 25 °C	50.000 h
Energy efficiency class	not required

Operating technology of driver	
Article No. of used driver	04356300
Length	99 mm
Width	38 mm
Hight	27.8 mm
AC nominal voltage min	176 V
AC nominal voltage max	264 V
Frequency max	60 Hz
Dimmable	Yes
Control	Trailing-edge phase
Starting current	20 A
Power	9 W
Output current up to	250 mA
Degree of protection	IP20
Protection class	II
Flicker-free	Yes

Mounting technology	
Mounting method	Recessed mounting
Place of installation	Ceiling-mounted
Adjustability	Not adjustable
Max. ceiling thickness	25 mm
Further references	No cover with thermal insulation material
Cover	Polycarbonat opal
Suitable for through-wiring	Yes, with optional accessories

Packing data	
Gross weight	0.313 kg
Length of packaging	130 mm
Packaging width	130 mm
Packaging hight	85 mm
Disposal at end of life	This product must not be disposed of with household waste. You are obliged, to dispose of such electrical waste separately. By disposing of electrical waste and other old or defective electronics separately, you support recycling or other forms of re-use. In that way you help to take care and to avoid that harmful substances get into the environment.

All technical data as well as, weight and measurements are based on rated values and had been carefully prepared. We reserve the right to make technical changes which are are important in progressing. Product pictures are examples and can vary from the original. Subject to errors.
Date 18.06.2026 Orders are placed under our general terms and conditions under https://www.brumberg.com/en/terms-and-conditions/general-terms-and-conditions-of-sale/

MUNA MICRO LED recessed downlight, 3CCT, UGR < 19, trailing edge dimmable, reflector silver, bevelled
Article no. 12563073

Optional accessories
Article no.: 81215070 Cover frame, square, for 12563 Dimensions: 114 mm x 114 mm x 6 mm https://www.brumberg.com/fileadmin/products/Datenblatt_81215070_2021_DE.pdf
Article no.: 81215080 Cover frame, square, for 12563 Dimensions: 114 mm x 114 mm x 6 mm https://www.brumberg.com/fileadmin/products/Datenblatt_81215080_2021_DE.pdf
Article no.: 81210080 Cover ring, round, for 12563 Dimensions: 114 mm x 6 mm https://www.brumberg.com/fileadmin/products/Datenblatt_81210080_2021_DE.pdf
Article no.: 81220070 Cover ring, round, with suspended float glass, partially frosted, for 12563 Dimensions: 114 mm x 22 mm https://www.brumberg.com/fileadmin/products/Datenblatt_81220070_2021_DE.pdf
Article no.: 81220080 Cover ring, round, with suspended float glass, partially frosted, for 12563 Dimensions: 114 mm x 22 mm https://www.brumberg.com/fileadmin/products/Datenblatt_81220080_2021_DE.pdf
Article no.: 83330000 Connection box 230 V AC, 3-pole Dimensions: 85 mm x 35 mm x 30 mm https://www.brumberg.com/fileadmin/products/Datenblatt_83330000_2021_DE.pdf

All technical data as well as, weight and measurements are based on rated values and had been carefully prepared. We reserve the right to make technical changes which are are important in progressing. Product pictures are examples and can vary from the original. Subject to errors.
Date 18.06.2026 Orders are placed under our general terms and conditions under https://www.brumberg.com/en/terms-and-conditions/general-terms-and-conditions-of-sale/