BRUMBERG
Light. Since 1873.

EXPAND Recessed spotlight, GX5.3

Article no. 20683180



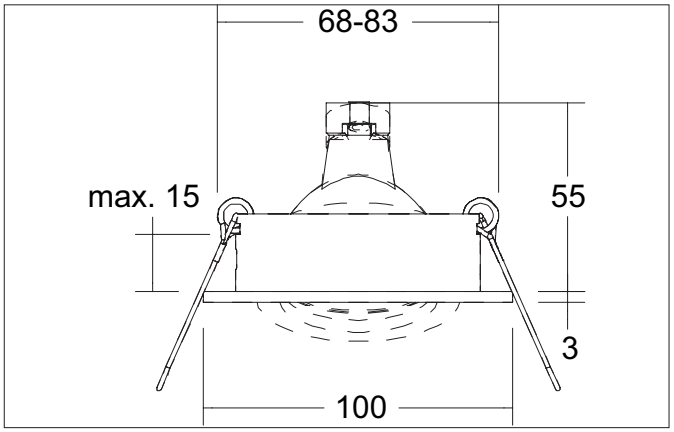

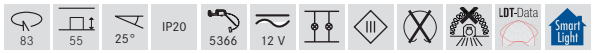

Tender

Recessed spotlight, GX5.3, black structure, Round. In a compact design, for installation in tool-less rapid assembly systems. Lamp holder: GX5.3, Mounting method: Recessed mounting, Place of installation: Ceiling-mounted, Material: Aluminium, Degree of protection: (DIN EN 60529) IP20, Protection class: (DIN EN 61140) III, Voltage: 12 V, Power: 13 W, Amount of light sources / fittings: 1 piece, Adjustability: Pivoted, without control gear, Dimmable: Depending on type of control gear, Type of dimming: Depending on driver.

Product Benefits

- LED recessed spot in square design made of solid aluminum with LED module 6 W (3,000 K) and dimmable DALI converter WITHOUT glow-in-the-dark effect.
- Ceiling cut-out 68 mm, diameter 82 mm, installation depth 50 mm, IP20.
- Pivoting range 25°.
- Large color variation. Without visible snap ring.
- Classic, formally restrained design.
- In the same optics also in GX5.3 or GU10 version and as a dimmable trailing-edge phase or DALI and as a loudspeaker version.
- In addition, in the same surface structure and in the same color also available in round design.

All technical data as well as, weight and measurements are based on rated values and had been carefully prepared. We reserve the right to make technical changes which are are important in progressing. Product pictures are examples and can vary from the original. Subject to errors.
Date 23.07.2026 Orders are placed under our general terms and conditions under https://www.brumberg.com/en/terms-and-conditions/general-terms-and-conditions-of-sale/

BRUMBERG
Light. Since 1873.

EXPAND Recessed spotlight, GX5.3

Article no. 20683180

Article data	
Article no.	20683180
GTIN	4255752520085
Series name	EXPAND
Short description	Recessed spotlight, GX5.3
Material	Aluminium
Colour	black structure
Type of surface	Structure
Shape	Round
Outer diameter	100 mm
Built-in diameter min.	68 mm
Built-in diameter max.	83 mm
Installation depth	55 mm
Hight	3 mm
Weight	0.106 kg
D licence plate	No
Conformance	CE, UKCA

Operating technology of the luminaire	
System output	13 W
Voltage type	AC/DC
AC nominal voltage max	12 V
Frequency max	50 Hz
Lamp	For LED-retrofill lamp
Lamp holder	GX5.3
Protection class	III
Degree of protection	IP20
Dimmable	Depending on type of control gear
Control	Depending on driver
Bulb change possible	Yes
Energy efficiency class	not required

Mounting technology	
Mounting method	Recessed mounting
Place of installation	Ceiling-mounted
Adjustability	Pivoted
Swivel angle	25°
Max. ceiling thickness	15 mm
Further references	No cover with thermal insulation material Smarthome
Cover	Without cover
Circlip	Without circlip

Packing data	
Gross weight	0.165 kg
Length of packaging	125 mm
Packaging width	110 mm
Packaging hight	70 mm
Disposal at end of life	This product must not be disposed of with household waste. You are obliged, to dispose of such electrical waste separately. By disposing of electrical waste and other old or defective electronics separately, you support recycling or other forms of re-use. In that way you help to take care and to avoid that harmful substances get into the environment.

All technical data as well as, weight and measurements are based on rated values and had been carefully prepared. We reserve the right to make technical changes which are are important in progressing. Product pictures are examples and can vary from the original. Subject to errors.
Date 23.07.2026 Orders are placed under our general terms and conditions under https://www.brumberg.com/en/terms-and-conditions/general-terms-and-conditions-of-sale/

BRUMBERG
Light. Since 1873.

EXPAND Recessed spotlight, GX5.3

Article no. 20683180

Compatible LED-modu-							
Article no.	Power	Beam angle	Colour temperature	Colour rendering	Luminous flux	Input	Hight
12925003	3 W	38°	2.700 K	CRI > 80	290 lm	350 mA	40 mm
12926003	3 W	38°	3.000 K	CRI > 80	310 lm	350 mA	40 mm
12925004	3 W	38°	4.000 K	CRI > 80	340 lm	350 mA	40 mm
12923383	6 W	38°	2.700 K	CRI > 80	740 lm	350 mA	32 mm
12923603	6 W	60°	2.700 K	CRI > 80	720 lm	350 mA	32 mm
12927383	6 W	38°	2.700 K	CRI > 90	600 lm	350 mA	32 mm
12924383	6 W	38°	3.000 K	CRI > 80	730 lm	350 mA	32 mm
12924603	6 W	60°	3.000 K	CRI > 80	770 lm	350 mA	32 mm
12928383	6 W	38°	3.000 K	CRI > 90	680 lm	350 mA	32 mm
12924384	6 W	38°	3.500 K	CRI > 80	730 lm	350 mA	32 mm
12924604	6 W	60°	3.500 K	CRI > 80	770 lm	350 mA	32 mm
12928384	6 W	38°	3.500 K	CRI > 90	680 lm	350 mA	32 mm
12923384	6 W	38°	4.000 K	CRI > 80	770 lm	350 mA	32 mm
12923604	6 W	60°	4.000 K	CRI > 80	790 lm	350 mA	32 mm
12927384	6 W	38°	4.000 K	CRI > 90	720 lm	350 mA	32 mm
12920183	6 W	18°	3.000 K	CRI > 80	740 lm	350 mA	31 mm
12920243	6 W	24°	3.000 K	CRI > 80	760 lm	350 mA	31 mm
12920003	6 W	38°	3.000 K	CRI > 80	780 lm	350 mA	31 mm
12920603	6 W	60°	3.000 K	CRI > 80	760 lm	350 mA	31 mm
12920184	6 W	18°	4.000 K	CRI > 80	780 lm	350 mA	31 mm
12920244	6 W	24°	4.000 K	CRI > 80	790 lm	350 mA	31 mm
12920004	6 W	38°	4.000 K	CRI > 80	810 lm	350 mA	31 mm
12920604	6 W	60°	4.000 K	CRI > 80	780 lm	350 mA	31 mm
12963383	6 W	38°	3.000 K - 1.800 K	CRI > 90	460 lm	350 mA	32 mm
12963603	6 W	60°	3.000 K - 1.800 K	CRI > 90	460 lm	350 mA	32 mm
12953003	12 W	38°	2.700 K	CRI > 80	1,130 lm	350 mA	70 mm
12954003	12 W	38°	3.000 K	CRI > 80	1,360 lm	350 mA	70 mm
12954004	12 W	38°	3.500 K	CRI > 80	1,290 lm	350 mA	70 mm
12953004	12 W	38°	4.000 K	CRI > 80	1,300 lm	350 mA	70 mm
12965003	12 W	38°	3.000 K - 1.800 K	CRI > 90	930 lm	350 mA	70 mm
12983003	12.5 W	38°	3.000 K	CRI > 97	920 lm	350 mA	95 mm
12823003	8 W	60°	2.850 K	CRI > 90	900 lm	24.00 V	52 mm
12845604	8 W	60°	2.700 K - 6.500 K	CRI > 90	659 lm	24.00 V	52 mm
18438002	8 W	60°	RGB + WW	CRI > 90	400 lm	24.00 V	52 mm
12929503	6.3 W	50°	2.700 K / 3.000 K / 4.000 K	CRI > 80	1,023 lm	350 mA	34 mm
12930503	5.9 W	50°	2.700 K / 3.000 K / 4.000 K	CRI > 90	810 lm	350 mA	34 mm
12933553	6 W	55°	2.700 K / 3.000 K / 4.000 K + dim-2warm (3.000 K - 2.200 K)	CRI > 90	730 lm	350 mA	32 mm

All technical data as well as, weight and measurements are based on rated values and had been carefully prepared. We reserve the right to make technical changes which are are important in progressing. Product pictures are examples and can vary from the original. Subject to errors.
Date 23.07.2026 Orders are placed under our general terms and conditions under https://www.brumberg.com/en/terms-and-conditions/general-terms-and-conditions-of-sale/

BRUMBERG
Light. Since 1873.

EXPAND Recessed spotlight, GX5.3
Article no. 20683180

Optional accessories
Article no.: 5327 Leaf spring set (2 pieces) https://www.brumberg.com/fileadmin/products/Datenblatt_00532700_2021_DE.pdf
Article no.: 81202180 Reducing ring D 130 mm, for luminaire cut-out size 68 mm Dimensions: 130 mm https://www.brumberg.com/fileadmin/products/Datenblatt_81202180_2021_DE.pdf
Article no.: 81203180 Reducing ring D 145 mm, for luminaire cut-out size 68 mm Dimensions: 145 mm https://www.brumberg.com/fileadmin/products/Datenblatt_81203180_2021_DE.pdf

All technical data as well as, weight and measurements are based on rated values and had been carefully prepared. We reserve the right to make technical changes which are are important in progressing. Product pictures are examples and can vary from the original. Subject to errors.
Date 23.07.2026 Orders are placed under our general terms and conditions under https://www.brumberg.com/en/terms-and-conditions/general-terms-and-conditions-of-sale/