BRUMBERG
Light. Since 1873.

RICO LED surface-mounted wall light, IP65, switchable

Article no. 60040103

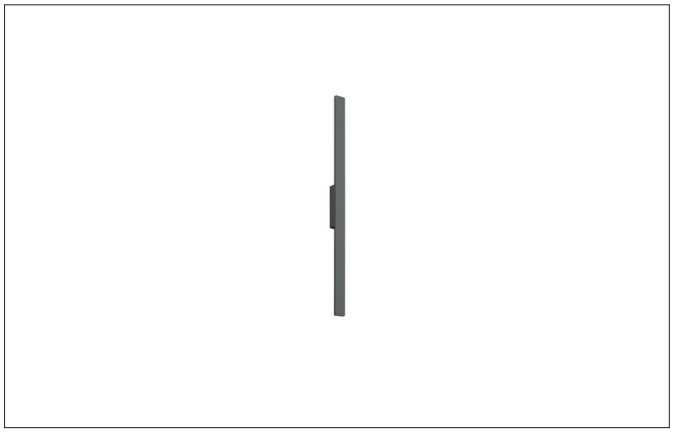

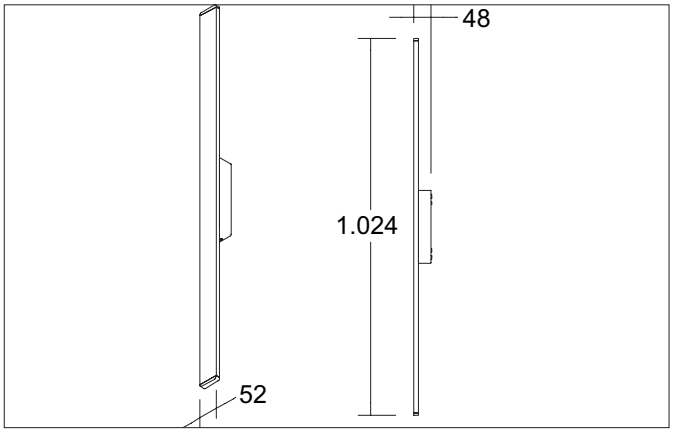

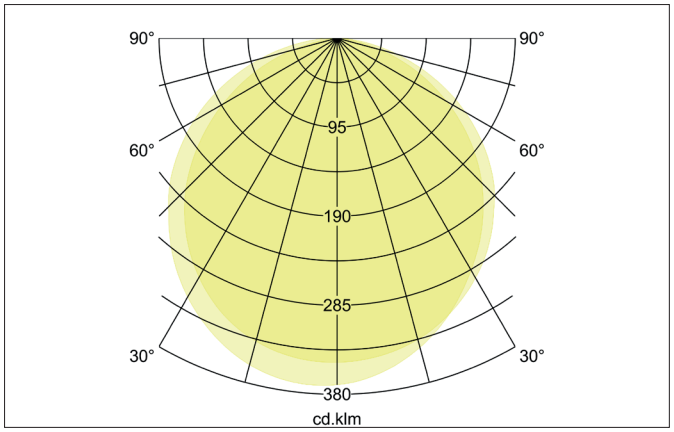

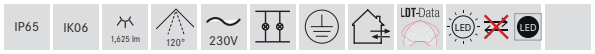

Tender
LED surface-mounted wall light, IP65, switchable, Rectangular.Luminaire length 1024.0 mm, Luminaire width 52.0 mm, Hight 48.0 mm Weight 1.2 kg, with rotattionssymmetrical, deep, wide distributed light intensity. Cover plastic, opalLuminous flux 1.625 lm, Power 1 x 18 W, Light colour warm white to warm white, Correlated color temprature (CCT) 3.000 - 3.000 K, Colour rendering index CRI > 90, Housing material: Aluminium / Plastic, Colour: graphite structure, Permissible ambient temperature (ta): -20 °C up to +45 °C, Protection class (EN 61140): I, Degree of protection (DIN EN 60529): IP65, shock resistance according to IEC62262: IK06 .With electronic driver, on/off switchable.

Article data	
Article no.	60040103
GTIN	4255752500391
Series name	RICO
Short description	LED surface-mounted wall light, IP65, switchable
Material	Aluminium / Plastic
Colour	graphite structure
RAL colour	7016
Type of surface	Structure
Shape	Rectangular
Length	1,024 mm
Width	52 mm
Hight	48 mm
Scope of delivery	incl. converter for connection to 230 V mains voltage, switchable
Weight	1.2 kg
D licence plate	No
Conformance	CE, UKCA

All technical data as well as, weight and measurements are based on rated values and had been carefully prepared. We reserve the right to make technical changes which are are important in progressing. Product pictures are examples and can vary from the original. Subject to errors.
Date 13.08.2026 Orders are placed under our general terms and conditions under https://www.brumberg.com/en/terms-and-conditions/general-terms-and-conditions-of-sale/

BRUMBERG
Light. Since 1873.

RICO LED surface-mounted wall light, IP65, switchable

Article no. 60040103

Lighting technology	
Colour temperature	3.000 K
Light colour	white
Light output	Indirect
Luminous flux	1,625 lm
System efficiency	90 lm/W
Colour rendering	CRI > 90
Luminaire optics	Cover satin
Reflector	Without
Beam angle	120°
Light sharing	Symmetric
Adjustable color temperature	No

Operating technology of the luminaire	
System output	18 W
Voltage type	AC
AC nominal voltage max	230 V
Frequency max	50 Hz
Frequency min	50 Hz
Lamp	LED
Lamp holder	LED
Protection class	I
Degree of protection	IP65
Ambient temperature	-20°C up to +45°C
Dimmable	No
Control	on/off
Bulb change possible	The light source of this luminaire may only be replaced by the manufacturer or a service technician commissioned by him or a similarly qualified person.
Energy efficiency class	not required

Mounting technology	
Mounting method	Surface mounting
Place of installation	Wall-mounted
Adjustability	Not adjustable
Impact resistance	IK06
Further references	Outdoor
Cover	Plastic, opal
Suitable for through-wiring	No

Packing data	
Gross weight	1.58 kg
Length of packaging	60 mm
Packaging width	55 mm
Packaging hight	1,080 mm
Disposal at end of life	This product must not be disposed of with household waste. You are obliged, to dispose of such electrical waste separately. By disposing of electrical waste and other old or defective electronics separately, you support recycling or other forms of re-use. In that way you help to take care and to avoid that harmful substances get into the environment.

All technical data as well as, weight and measurements are based on rated values and had been carefully prepared. We reserve the right to make technical changes which are are important in progressing. Product pictures are examples and can vary from the original. Subject to errors.
Date 13.08.2026 Orders are placed under our general terms and conditions under https://www.brumberg.com/en/terms-and-conditions/general-terms-and-conditions-of-sale/