BRUMBERG
Light. Since 1873.

SOL PRO LED high bay spotlight, DALI-2 dimmable, multi-lumen, multi-colour, multi-beam angle

Article no. 78314084



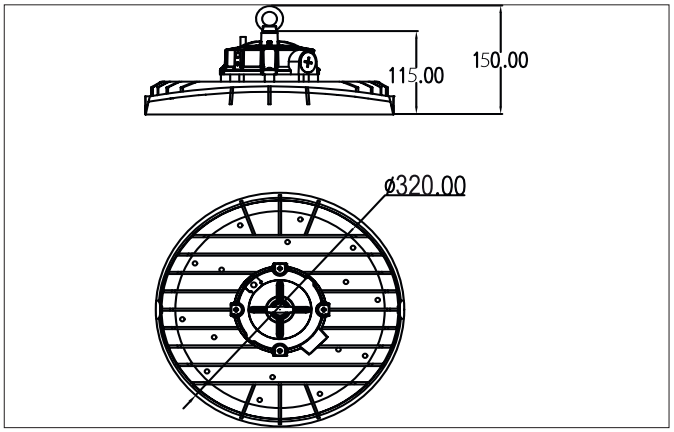

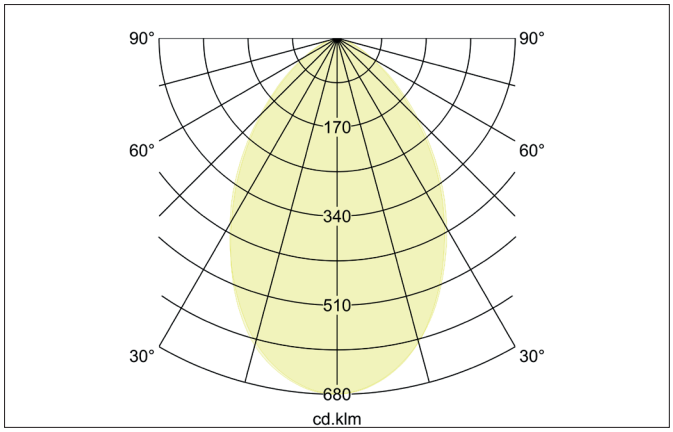

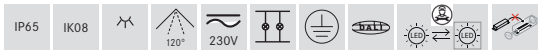

Tender

LED high bay spotlight, DALI-2 dimmable, multi-lumen, multi-colour, multi-beam angle, Round.Luminaire diameter 320.0 mm, Hight 150.0 mm Weight 2.15 kg, with rotattionssymmetrical, deep, wide distributed light intensity. Cover polycarbonat clearLuminous flux 21.500 - 35.500 lm, Power 1 x 200 W, Light colour warm white to neutral white, Correlated color temprature (CCT) 3.000 - 5.000 K, Colour rendering index CRI > 80, Rated life time L70/B50 at 25 °C: 194.000 h, Rated life time L80/B10 at 25 °C: 76.000 h, Rated life time L80/B20 at 25 °C: 90.000 h, Rated life time L80/B50 at 25 °C: 123.000 h, Housing material: Aluminium / Polycarbonate, Colour: black matt, Permissible ambient temperature (ta): -30 °C up to +50 °C, Protection class (EN 61140): I, Degree of protection (DIN EN 60529): IP65, shock resistance according to IEC62262: IK08 .With electronic driver, DALI-2 dimmable.

Product Benefits

Abstrahlwinkel einstellbar per Dipschalter: 70° / 90° / 120°.
Leistung einstellbar per Dipschalter: 130W / 160W / 200W.
Farbtemperatur einstellbar per Dipschalter: 3.000 K / 4.000 K / 5.000 K.
Lange Lebensdauer: L80B50 > 120.000 h bei 25°C.
Hohe Lichtausbeute.
Standardmäßig dimmbar: DALI-2.
Umfangreiches Zubehör.
Schutzart: IP65.
Umgebungstemperaturbereich: -30 °C bis +50 °C.

All technical data as well as, weight and measurements are based on rated values and had been carefully prepared. We reserve the right to make technical changes which are are important in progressing. Product pictures are examples and can vary from the original. Subject to errors.
Date 19.02.2026 Orders are placed under our general terms and conditions under https://www.brumberg.com/en/terms-and-conditions/general-terms-and-conditions-of-sale/

BRUMBERG
Light. Since 1873.

SOL PRO LED high bay spotlight, DALI-2 dimmable, multi-lumen, multi-colour, multi-beam angle

Article no. 78314084

Article data	
Article no.	78314084
GTIN	4255752528654
Series name	SOL PRO
Short description	LED high bay spotlight, DALI-2 dimmable, multi-lumen, multi-colour, multi-beam angle
Material	Aluminium / Polycarbonate
Colour	black matt
Shape	Round
Outer diameter	320 mm
Hight	150 mm
Scope of delivery	inkl. schraubbare Befestigungsöse.
Weight	2.15 kg
Length of the connection line	1,000 mm
D licence plate	No
Conformance	CE, UKCA

Lighting technology	
Colour temperature	3.000 K, 4.000 K und 5.000 K
Light colour	white
Color Temperature 1	3,000 K
Color Temperature 2	4,000 K
Color Temperature 3	5,000 K
Light output	Direct
Luminous flux	21,500 - 35,500 lm
Luminous flux 1	32,500 lm
Luminous flux 2	35,500 lm
Luminous flux 3	34,450 lm
System efficiency	178 lm/W
McAdam-Step	McAdam-Step 6
Colour rendering	CRI > 80
Luminaire optics	Lens
Reflector	Without
Beam angle	120°
Light sharing	Symmetric
Adjustable color temperature	Stages

All technical data as well as, weight and measurements are based on rated values and had been carefully prepared. We reserve the right to make technical changes which are are important in progressing. Product pictures are examples and can vary from the original. Subject to errors.
Date 19.02.2026 Orders are placed under our general terms and conditions under https://www.brumberg.com/en/terms-and-conditions/general-terms-and-conditions-of-sale/

BRUMBERG
Light. Since 1873.

SOL PRO LED high bay spotlight, DALI-2 dimmable, multi-lumen, multi-colour, multi-beam angle
Article no. 78314084

Operating technology of the luminaire	
Voltage type	AC/DC
AC nominal voltage min	120 V
AC nominal voltage max	277 V
DC nominal voltage min	180 V
DC nominal voltage max	305 V
Frequency max	60 Hz
Frequency min	50 Hz
Lamp	LED
Lamp holder	Without fitting
Protection class	I
Degree of protection	IP65
Ambient temperature	-30°C up to +50°C
Dimmable	Yes
Control	DALI-2
Minimum / maximum dimming range	10 - 100 %
Length of the connection line	1,000 mm
Design of the connecting cable	Einseitig
Bulb change possible	The light source of this luminaire may only be replaced by the manufacturer or a service technician commissioned by him or a similarly qualified person.
Rated life time L70/B50 at 25 °C	194,000 h
Rated life time L80/B10 at 25 °C	76.000 h
Rated life time L80/B20 at 25 °C	90.000 h
Rated life time L80/B50 at 25 °C	123.000 h
Rated life time L90/B10 at 25 °C	38.000 h
Energy efficiency class	not required
max. no. lights on B16 A	7
max. no. lights on C10 A	7
max. no. lights on C16 A	12

Mounting technology	
Mounting method	Suspended
Place of installation	Ceiling-mounted
Adjustability	Not adjustable
Impact resistance	IK08
Cover	Polycarbonat clear
Suitable for through-wiring	No

Packing data	
Gross weight	2.9 kg
Length of packaging	335 mm
Packaging width	335 mm
Packaging hight	140 mm
Disposal at end of life	This product must not be disposed of with household waste. You are obliged, to dispose of such electrical waste separately. By disposing of electrical waste and other old or defective electronics separately, you support recycling or other forms of re-use. In that way you help to take care and to avoid that harmful substances get into the environment.

All technical data as well as, weight and measurements are based on rated values and had been carefully prepared. We reserve the right to make technical changes which are are important in progressing. Product pictures are examples and can vary from the original. Subject to errors.
Date 19.02.2026 Orders are placed under our general terms and conditions under https://www.brumberg.com/en/terms-and-conditions/general-terms-and-conditions-of-sale/

SOL PRO LED high bay spotlight, DALI-2 dimmable, multi-lumen, multi-colour, multi-beam angle
Article no. 78314084

Optional accessories
Article no.: 81071000 PC lampshade for 78314 / 78316 Dimensions: 410 mm x 151 mm https://www.brumberg.com/fileadmin/products/Datenblatt_81071000_2021_DE.pdf
Article no.: 81072250 Alu-Leuchtenschirm zu 78314 / 78316 Dimensions: 427 mm x 137 mm https://www.brumberg.com/fileadmin/products/Datenblatt_81072250_2021_DE.pdf
Article no.: 81073000 Chain suspension, 1,000 mm Dimensions: 1,000 mm https://www.brumberg.com/fileadmin/products/Datenblatt_81073000_2021_DE.pdf
Article no.: 81074000 Chain suspension, 2,000 mm Dimensions: 2,000 mm https://www.brumberg.com/fileadmin/products/Datenblatt_81074000_2021_DE.pdf
Article no.: 81075080 Ceiling/wall bracket SOL PRO Dimensions: 296 mm x 145 mm x 117 mm https://www.brumberg.com/fileadmin/products/Datenblatt_81075080_2021_DE.pdf
Article no.: 81076250 Protective grille SOL PRO Dimensions: 269 mm x 42 mm https://www.brumberg.com/fileadmin/products/Datenblatt_81076250_2021_DE.pdf
Article no.: 81087080 PIR sensor for 78314xxx Dimensions: 50.4 mm x 43.8 mm https://www.brumberg.com/fileadmin/products/Datenblatt_81087080_2021_DE.pdf
Article no.: 81093000 Adapter for 78314xxx and 78316xxx to use a Zhaga sensor. Dimensions: 38.5 mm x 32 mm https://www.brumberg.com/fileadmin/products/Datenblatt_81093000_2021_DE.pdf

All technical data as well as, weight and measurements are based on rated values and had been carefully prepared. We reserve the right to make technical changes which are are important in progressing. Product pictures are examples and can vary from the original. Subject to errors.
Date 19.02.2026 Orders are placed under our general terms and conditions under https://www.brumberg.com/en/terms-and-conditions/general-terms-and-conditions-of-sale/