A2D300-AP02-02

AC axial fan

sickle-shaped blades (S series)

ebm-papst Mulfingen GmbH & Co. KG
Bachmühle 2 · D-74673 Mulfingen
Phone +49 7938 81-0
Fax +49 7938 81-110
info1@de.ebmpapst.com
www.ebmpapst.com

Limited partnership · Headquarters Mulfingen
Amtsgericht (court of registration) Stuttgart · HRA 590344

General partner Elektrobau Mulfingen GmbH · Headquarters Mulfingen
Amtsgericht (court of registration) Stuttgart · HRB 590142

Nominal data

Type	**A2D300-AP02-02**
Motor	**M2D074-DF**

Phase		3~	3~	3~	3~
Nominal voltage	VAC	230	230	400	400
Wiring		Δ	Δ	Y	Y
Frequency	Hz	50	60	50	60
Method of obtaining data		fa	fa	fa	fa
Valid for approval/standard		CE	CE	CE	CE
Speed (rpm)	min^{-1}	2580	2750	2580	2750
Power consumption	W	210	300	210	300
Current draw	A	0.62	0.84	0.36	0.48
Max. back pressure	Pa	200	125	200	125
Max. back pressure	in. wg	0.8	0.5	0.8	0.5
Min. ambient temperature	°C	-25	-25	-25	-25
Max. ambient temperature	°C	75	40	75	40
Starting current	A	2.0	1.9	1.16	1.1

ml = Max. load · me = Max. efficiency · fa = Free air · cs = Customer specification · ce = Customer equipment
Subject to change

Data according to Commission Regulation (EU) 327/2011 (EN 17166)

		Actual	Req. 2015
01 Overall efficiency η_{es}	%	32	29.8
02 Measurement category		A	
03 Efficiency category		Static	
04 Efficiency grade N		42.2	40
05 Variable speed drive		No	

09 Power consumption P_e	kW	0.24
09 Air flow q_v	m^3/h	2255
09 Pressure increase p_{fs}	Pa	127
10 Speed (rpm) n	min^{-1}	2485
11 Specific ratio*		1.00

Data obtained at optimum efficiency level.

* Specific ratio = 1 + p_{fs} / 100 000 Pa

LU-189127

The efficiency values displayed for achieving conformity with the Ecodesign Regulation EU 327/2011 has been reached with defined air duct components (e.g. inlet rings).
The dimensions must be requested from ebm-papst. If other air conduction geometries are used on the installation side, the ebm-papst evaluation loses its validity/the conformity must be confirmed again.

The product does not fall within the scope of Regulation (EU) 2019/1781 due to the exception specified in Article 2 (2a) (motors completely integrated into a product).

AC axial fan

sickle-shaped blades (S series)

Technical description

Weight	3.2 kg
Size	300 mm
Motor size	74
Rotor surface	Painted black
Blade material	Sheet steel, painted black
Number of blades	5
Airflow direction	A
Direction of rotation	Clockwise, viewed toward rotor
Degree of protection	IP44; installation- and position-dependent as per EN 60034-5
Insulation class	"F"
Moisture (F) / Environmental (H) protection class	H1
Max. permitted ambient temp. for motor (transport/storage)	+ 80 °C
Min. permitted ambient temp. for motor (transport/storage)	- 40 °C
Installation position	Shaft horizontal or rotor on bottom; rotor on top on request
Condensation drainage holes	On rotor side
Mode	S1
Motor bearing	Ball bearing
Touch current according to IEC 60990 (measuring circuit Fig. 4, TN system)	< 0.75 mA
With cable	Variable
Protection class assignment	I; If a protective earth is connected by the customer This component for installation may have several local protection classes. This information relates to this component's basic design. The final protection class is based on the component's intended installation and connection.
Conformity with standards	EN 60335-1, motor does not have factory-installed overheating protection; CE
Approval	EAC; CCC

ebm-papst Mulfingen GmbH & Co. KG · Bachmühle 2 · D-74673 Mulfingen · Phone +49 (0) 7938 81-0 · Fax +49 (0) 7938 81-110 · info1@de.ebmpapst.com · www.ebmpapst.com

AC axial fan

sickle-shaped blades (S series)

Product drawing

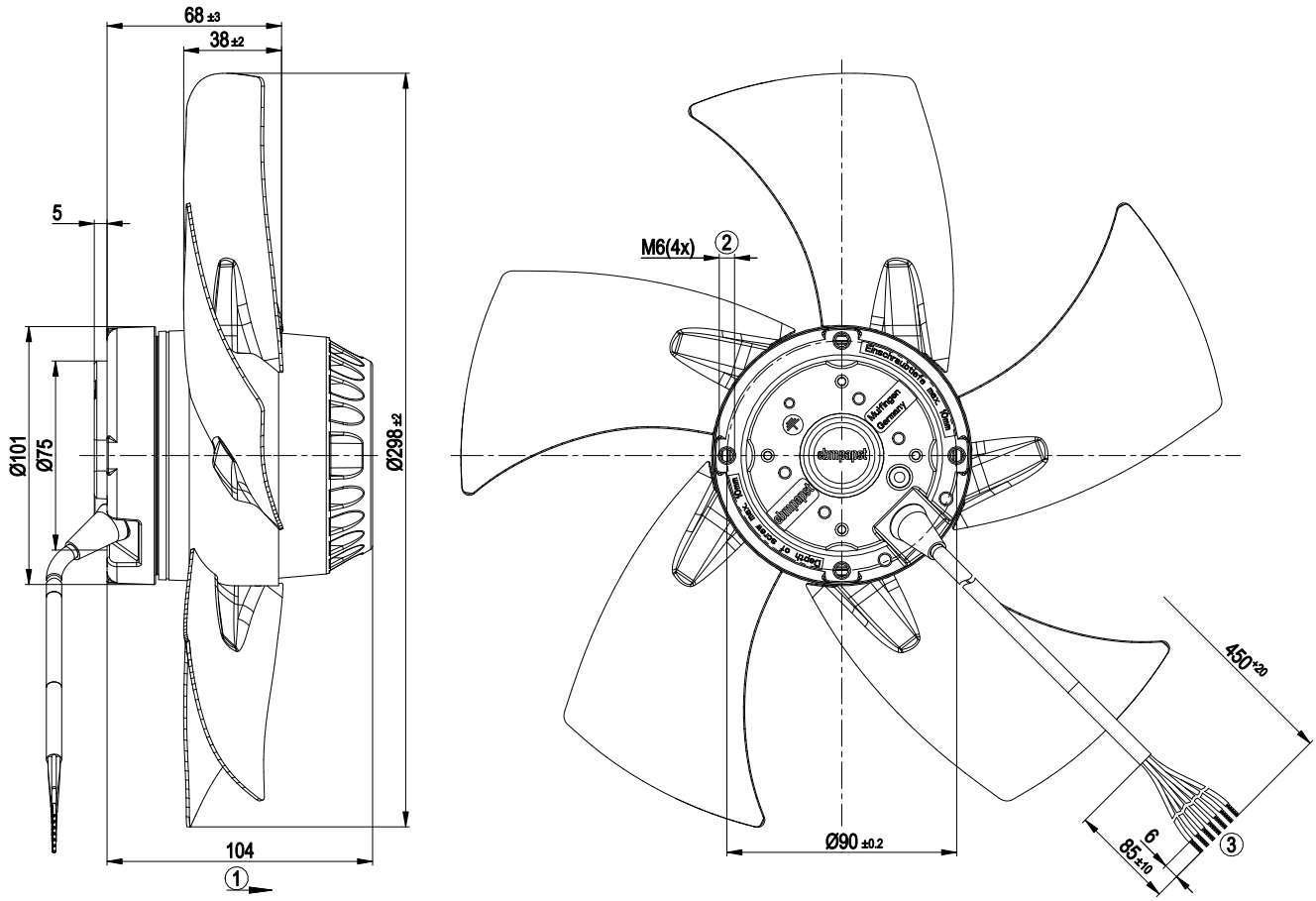

1	Direction of air flow "A"
2	Max. clearance for screw 10 mm
3	Cable PFA AWG20 (green/yellow AWG18), 7x crimped splices

ebm-papst Mulfingen GmbH & Co. KG · Bachmühle 2 · D-74673 Mulfingen · Phone +49 (0) 7938 81-0 · Fax +49 (0) 7938 81-110 · info1@de.ebmpapst.com · www.ebmpapst.com

AC axial fan

sickle-shaped blades (S series)

Connection diagram

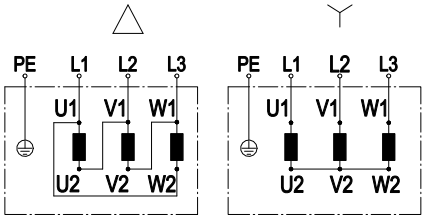

Change of rotation direction by reversing two phases

	Three-phase motor	Δ	Delta connection	Y	Star connection
L1	= U1 = black	L2	= V1 = blue	L3	= W1 = brown
U2	green	V2	white	W2	yellow
PE	green/yellow				

ebm-papst Mulfingen GmbH & Co. KG · Bachmühle 2 · D-74673 Mulfingen · Phone +49 (0) 7938 81-0 · Fax +49 (0) 7938 81-110 · info1@de.ebmpapst.com · www.ebmpapst.com

AC axial fan

sickle-shaped blades (S series)

Curves: Air performance 50 Hz

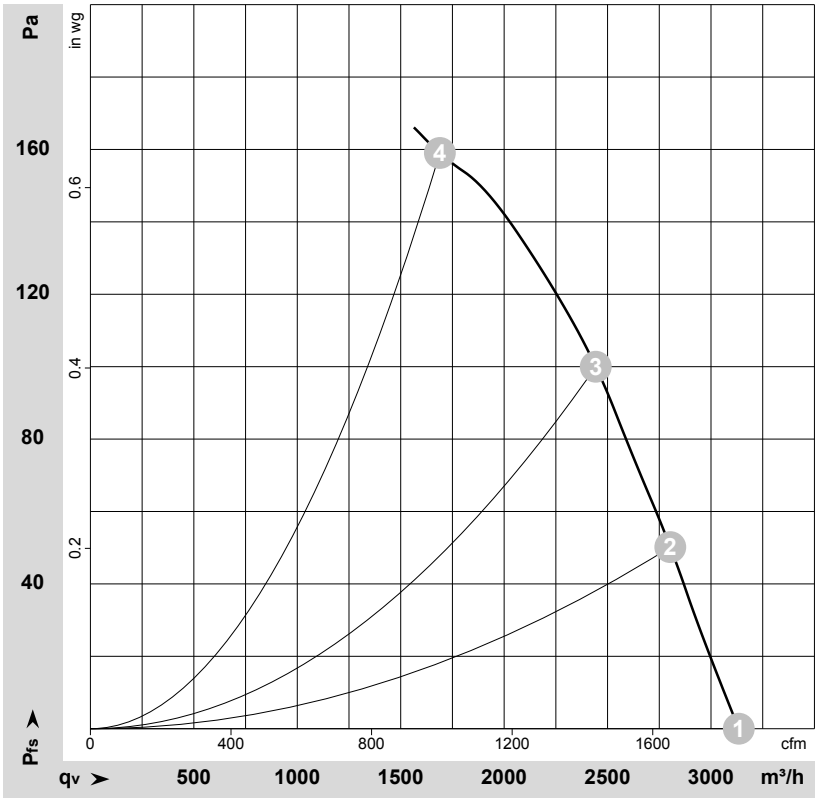

ρ = 1.15 kg/m³ ± 2 %

Measurement: LU-62732-1

Air performance measured according to ISO 5801 installation category A. For detailed information on the measurement setup, contact ebm-papst. Intake sound level: Sound power level according to ISO 13347 / sound pressure level measured at 1 m distance from fan axis. The values given are valid under the specified measuring conditions and may vary due to conditions of installation. For deviations from the standard configuration, the parameters have to be checked on the installed unit.

Measured values

	Wired	U	f	n	P_e	I	q_V	p_{fs}	q_V	p_{fs}
		V	Hz	min^{-1}	W	A	m^3/h	Pa	cfm	in. wg
1	Y	400	50	2580	210	0.36	3135	0	1845	0.00
2	Y	400	50	2540	228	0.36	2805	50	1650	0.20
3	Y	400	50	2490	244	0.39	2445	100	1440	0.40
4	Y	400	50	2385	281	0.44	1690	160	995	0.64

Wired = Wiring · U = Voltage · f = Frequency · n = Speed (rpm) · P_e = Power consumption · I = Current draw · q_V = Air flow · p_{fs} = Pressure increase

ebm-papst Mulfingen GmbH & Co. KG · Bachmühle 2 · D-74673 Mulfingen · Phone +49 (0) 7938 81-0 · Fax +49 (0) 7938 81-110 · info1@de.ebmpapst.com · www.ebmpapst.com

AC axial fan

sickle-shaped blades (S series)

Curves: Air performance 60 Hz

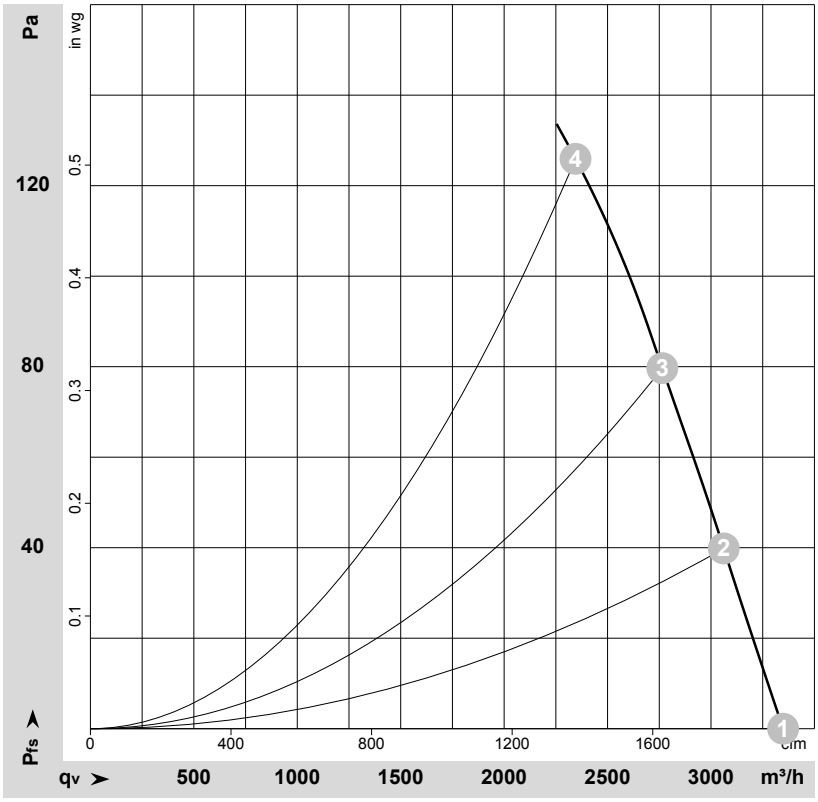

ρ = 1.15 kg/m³ ± 2 %

Measurement: LU-62733-1

Air performance measured according to ISO 5801 installation category A. For detailed information on the measurement setup, contact ebm-papst. Intake sound level: Sound power level according to ISO 13347 / sound pressure level measured at 1 m distance from fan axis. The values given are valid under the specified measuring conditions and may vary due to conditions of installation. For deviations from the standard configuration, the parameters have to be checked on the installed unit.

Measured values

	U	f	n	P_e	I	q_V	p_{fs}	q_V	p_{fs}
	V	Hz	min^{-1}	W	A	m^3/h	Pa	cfm	in. wg
1	400	60	2750	300	0.48	3350	0	1970	0.00
2	400	60	2685	316	0.48	3060	40	1800	0.16
3	400	60	2625	331	0.50	2765	80	1625	0.32
4	400	60	2540	349	0.53	2345	125	1380	0.50

U = Voltage · f = Frequency · n = Speed (rpm) · P_e = Power consumption · I = Current draw · q_V = Air flow · p_{fs} = Pressure increase

ebm-papst Mulfingen GmbH & Co. KG · Bachmühle 2 · D-74673 Mulfingen · Phone +49 (0) 7938 81-0 · Fax +49 (0) 7938 81-110 · info1@de.ebmpapst.com · www.ebmpapst.com