Operating instructions

ebm-papst Mulfingen GmbH & Co. KG
Bachmühle 2
D-74673 Mulfingen
Phone +49 (0) 7938 81-0
Fax +49 (0) 7938 81-110
info1@de.ebmpapst.com
www.ebmpapst.com

CONTENTS

1. SAFETY REGULATIONS AND INFORMATION 1
1.1 Hazard levels for warnings 1
1.2 Staff qualifications 1
1.3 Basic safety rules 1
1.4 Voltage 1
1.5 Safety and protective features 2
1.6 Electromagnetic radiation 2
1.7 Mechanical movement 2
1.8 Emissions 2
1.9 Hot surface 2
1.10 Storage 2

2. INTENDED USE 3

3. TECHNICAL DATA 4
3.1 Product drawing 4
3.2 Nominal data 5
3.3 Technical description 5
3.4 Mounting data 5
3.5 Transport and storage conditions 5
3.6 Electromagnetic compatibility 5

4. CONNECTION AND STARTUP 6
4.1 Mechanical connection 6
4.2 Electrical connection 6
4.3 Connecting the cables 7
4.4 Connection diagram 8
4.5 Checking connections 9
4.6 Switching on the device 9
4.7 Switching off the device 9

5. INTEGRATED PROTECTIVE FEATURES 9

6. MAINTENANCE, MALFUNCTIONS, POSSIBLE CAUSES AND REMEDIES 9
6.1 Cleaning 10
6.2 Safety inspection 10
6.3 Disposal 10

1. SAFETY REGULATIONS AND INFORMATION

Read these operating instructions carefully before starting work on the device. Observe the following warnings to prevent malfunctions or danger to persons.
These operating instructions are to be regarded as part of the device. The device is only to be sold or passed on together with the operating instructions.
These operating instructions may be duplicated and distributed to inform about potential dangers and their prevention.

1.1 Hazard levels for warnings

These operating instructions use the following hazard levels to indicate potentially hazardous situations and important safety regulations:



DANGER
Indicates an imminently hazardous situation which will result in death or serious injury if the specified actions are not taken. Compliance with the instructions is imperative.

WARNING
Indicates a potentially hazardous situation which can result in death or serious injury if the specified actions are not taken. Exercise extreme caution while working.

CAUTION
Indicates a potentially hazardous situation which can result in minor or moderate injury or damage to property if the specified actions are not taken.

NOTE
A potentially harmful situation can occur and, if not avoided, can lead to property damage.

1.2 Staff qualifications

The device may only be transported, unpacked, installed, operated, maintained and otherwise used by suitably qualified, trained and authorized technical staff.
Only authorized specialists are permitted to install the device, to carry out a test run and to perform work on the electrical installation.

1.3 Basic safety rules

The safety hazards associated with the device must be assessed again following installation in the final product.
The locally applicable industrial safety regulations are always to be observed when working on the device.
Keep the workplace clean and tidy. Untidiness in the work area increases the risk of accidents.
Note the following when working on the device:

⇒ Do not perform any modifications, additions or conversions on the device without the approval of ebm-papst.

1.4 Voltage

⇒ Check the device's electrical equipment at regular intervals; see Chapter 6.2 Safety inspection.

⇒ Replace loose connections and defective cables immediately.



DANGER
Electrically charged device
Risk of electric shock

→ When working on an electrically charged device, stand on a rubber mat.

Translation of the original operating instructions

WARNING
Live terminals and connections even with device switched off
Electric shock

→ Wait five minutes after disconnecting the voltage at all poles before opening the device.

CAUTION
In the event of a fault, the rotor and the impeller will be energized
The rotor and the impeller have basic insulation.

→ Do not touch the rotor and impeller once installed.

CAUTION
If control voltage or a stored speed set value is applied, the motor will restart automatically, e.g. after a power failure.
Risk of injury

→ Keep out of the device's danger zone.

→ When working on the device, switch off the line voltage and ensure that it cannot be switched back on.

→ Wait until the device comes to a stop.

→ After working on the device, remove any tools or other objects from the device.

1.5 Safety and protective features

DANGER
Guard missing and guard not functioning
Without a guard, hands may become caught up in the device during operation for example, resulting in serious injury. Loose parts or items of clothing could be drawn in.

→ The device is a built-in component. As the owner, you are responsible for ensuring that the device is adequately safeguarded.# Operate the device only with a fixed protective device and guard grill.

→ Stop the device immediately if a protective device is found to be missing or ineffective.

1.6 Electromagnetic radiation

Interference from electromagnetic radiation is possible, e.g. in conjunction with open- and closed-loop control devices.
If impermissible radiation levels occur following installation, appropriate shielding measures have to be taken by the user.

NOTE
Electrical or electromagnetic interference after installing the device in customer equipment.

→ Verify that the entire setup is EMC-compliant.

1.7 Mechanical movement

DANGER
Rotating device
Risk of injury to body parts coming into contact with the rotor or the impeller.

→ Secure the device against accidental contact.

→ Before working on the system/machine, wait until all parts have come to a standstill.

WARNING
Rotating device
Long hair and dangling items of clothing, jewelry and the like can become entangled and be pulled into the device. Injuries can result.

→ Do not wear any loose-fitting or dangling clothing or jewelry while working on rotating parts.

→ Protect long hair with a cap.

1.8 Emissions

WARNING
Depending on the installation and operating conditions, the sound pressure level may exceed 70 dB(A).
Risk of noise-induced hearing loss

→ Take appropriate technical safety measures.

→ Protect operating personnel with appropriate safety equipment such as hearing protection.

→ Also observe the requirements of local agencies.

1.9 Hot surface

CAUTION
High temperature on electronics housing
Risk of burns

→ Ensure sufficient protection against accidental contact.

1.10 Storage

⇒ Store the device, partially or fully assembled, in a dry place, protected against the weather and free from vibration, in the original packaging in a clean environment.

⇒ Protect the device against environmental effects and dirt until final installation.

⇒ We recommend storing the device for no longer than one year in order to guarantee trouble-free operation and the longest possible service life.

⇒ Even devices explicitly intended for outdoor use are to be stored as described prior to commissioning.

⇒ Maintain the storage temperature, see Chapter 3.5 Transport and storage conditions.

Translation of the original operating instructions

ebm-papst Mulfingen GmbH & Co. KG · Bachmühle 2 · D-74673 Mulfingen · Phone +49 (0) 7938 81-0 · Fax +49 (0) 7938 81-110 · info1@de.ebmpapst.com · www.ebmpapst.com

2. INTENDED USE

The device is exclusively designed as a built-in device for conveying air according to its technical data.
Any other usage above and beyond this does not conform with the intended purpose and constitutes misuse of the device.
Customer equipment must be capable of withstanding the mechanical and thermal stresses that can arise from this product. This applies for the entire service life of the equipment in which this product is installed.

Intended use also includes

- Use of the device in stationary systems only.
- Performance of all maintenance work.
- Conveying air at an ambient air pressure between 800 mbar and 1050 mbar.
- Using the device within the permitted ambient temperature range; see Chapter 3.5 Transport and storage conditions and Chapter 3.2 Nominal data.
- Operating the device with all protective devices.
- Following the operating instructions.

Improper use

In particular, operating the device in the following ways is prohibited and could be hazardous:

- Operating the device in an unbalanced state, e.g. due to dirt deposits or ice formation.
- Resonant operation, operation with severe vibration. This also includes vibration transmitted to the fan from the customer installation.
- Operation in medical equipment with a life-sustaining or life-support function.
- Conveying solids in the flow medium.
- Painting the device
- Connections (e.g. screws) coming loose during operation.
- Conveying air that contains abrasive particles.
- Conveying highly corrosive air, e.g. salt spray. Exception: devices designed for salt spray and correspondingly protected.
- Conveying air with high dust content, e.g. suctioning off sawdust.
- Operating the device close to flammable materials or components.
- Operating the device in an explosive atmosphere.
- Using the device as a safety component or to perform safety-related functions.
- Operation with completely or partially disassembled or manipulated protective devices.
- In addition, all applications not listed among the intended uses.

Translation of the original operating instructions

ebm-papst Mulfingen GmbH & Co. KG · Bachmühle 2 · D-74673 Mulfingen · Phone +49 (0) 7938 81-0 · Fax +49 (0) 7938 81-110 · info1@de.ebmpapst.com · www.ebmpapst.com

3. TECHNICAL DATA

3.1 Product drawing

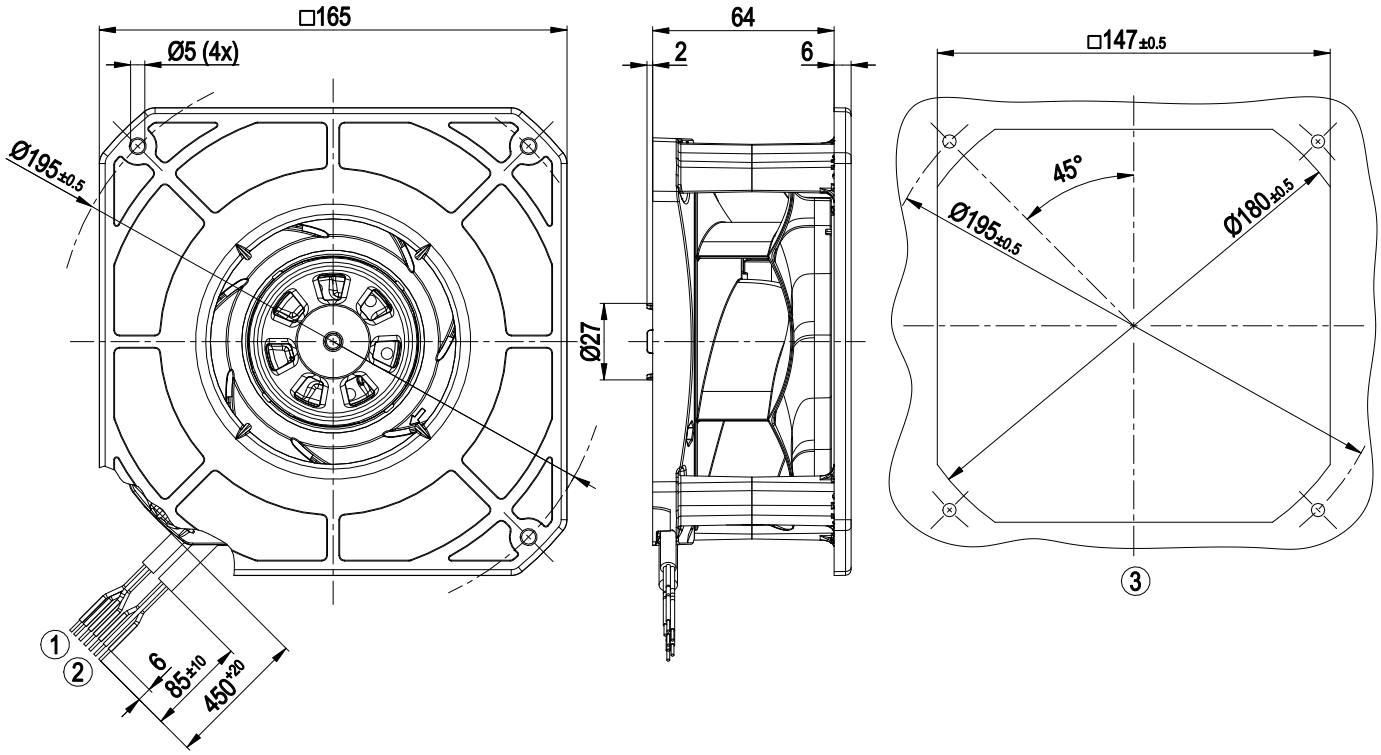

All dimensions in mm.

1	Cable PVC AWG22, 4x crimped splices
2	Cable PVC AWG20, 3x crimped splices
3	Mounting dimensions

Translation of the original operating instructions

ebm-papst Mulfingen GmbH & Co. KG · Bachmühle 2 · D-74673 Mulfingen · Phone +49 (0) 7938 81-0 · Fax +49 (0) 7938 81-110 · info1@de.ebmpapst.com · www.ebmpapst.com

3.2 Nominal data

Motor	M3G045-AI

Phase	1~
Nominal voltage / VAC	230
Nominal voltage range / VAC	200 .. 240
Frequency / Hz	50/60

Method of obtaining data	ml
Speed (rpm) / min-1	3770
Power consumption / W	27
Current draw / A	0.27
Min. ambient temperature / °C	-25
Max. ambient temperature / °C	60

ml = Max. load · me = Max. efficiency · fa = Free air
cs = Customer specification · ce = Customer equipment

Subject to change

3.3 Technical description

Weight	0.9 kg
Size	133 mm
Motor size	45
Rotor surface	Thick-film passivated
Electronics housing material	Die-cast aluminum
Impeller material	PP plastic
Housing material	PA plastic
Number of blades	7
Direction of rotation	Clockwise, viewed toward rotor
Degree of protection	IP54
Insulation class	"B"
Moisture (F) / Environmental (H) protection class	H1+
Installation position	Any
Condensation drainage holes	None, open rotor
Mode	S1
Motor bearing	Ball bearing
Technical features	- Output 10 VDC, max. 1.1 mA - Tach output - Power limiter - Motor current limitation - Soft start - Control input 0-10 VDC / PWM - Control interface with SELV potential safely disconnected from supply - Overvoltage detection - Thermal overload protection for electronics/motor - Line undervoltage detection
Touch current according to IEC 60990 (measuring circuit Fig. 4, TN system)	<= 3.5 mA
Motor protection	Electronic motor protection
with cable	Lateral
Protection class	I (with customer connection of protective earth)
Conformity with standards	EN 60335-1; CE; UKCA
Approval	EAC; UL 1004-7 + 60730-1; CCC; VDE; CSA C22.2 No. 77 + CAN/CSA-E60730-1

⇒ Use the device in accordance with its degree of protection.

Information on surface quality

The surfaces of the products conform to the generally applicable industrial standard. The surface quality may change during the production period. This has no effect on strength, dimensional stability and dimensional accuracy.
The color pigments in the paints used perceptibly react to UV light over the course of time. The product is to be protected against UV radiation to prevent the formation of patches and fading. Changes in color are not a reason for complaint and are not covered by the warranty. UV radiation in the frequency range and the intensity of natural solar radiation has no effect on the technical properties of the products.

3.4 Mounting data

Further mounting data can be taken from the product drawing or Chapter 4.1 Mechanical connection as required.

Strength class of screws	8.8

For screw clearance, see Chapter 3.1 Product drawing

⇒ Secure the screws against unintentional loosening (e.g. use self-locking screws).

3.5 Transport and storage conditions

Max. permitted ambient temp. for motor (transport/ storage)	+ 80 °C
Min. permitted ambient temp. for motor (transport/ storage)	- 40 °C

3.6 Electromagnetic compatibility

EMC immunity to interference	According to EN 61000-6-2 (industrial environment)
EMC circuit feedback	According to EN 61000-3-2/3
EMC interference emission	According to EN 61000-6-3 (household environment)

Translation of the original operating instructions

ebm-papst Mulfingen GmbH & Co. KG · Bachmühle 2 · D-74673 Mulfingen · Phone +49 (0) 7938 81-0 · Fax +49 (0) 7938 81-110 · info1@de.ebmpapst.com · www.ebmpapst.com

4. CONNECTION AND STARTUP

4.1 Mechanical connection



CAUTION
Risk of cutting and crushing when removing device from packaging



→ Carefully remove the device from the packaging by grasping hold of the frame. Never subject to any impact.

→ Wear safety shoes and cut-resistant safety gloves.



NOTE
Damage to the device from vibration
Bearing damage, shorter service life

→ The fan must not be subjected to force or excessive vibration from sections of the installation.

→ If the fan is connected to air ducts, the connection should be isolated from vibration, e.g. using compensators or similar elements.

→ Ensure stress-free attachment of the fan to the substructure.

⇒ The fan may not be handled in the area around the inlet nozzle during transport and installation.
There is a risk of damage to the impeller.

⇒ Check the device for transport damage. Damaged devices are not to be installed.

⇒ Install the undamaged device in accordance with your application.



CAUTION
Possible damage to the device
If the device slips during installation, serious damage can result.

→ Ensure that the device is securely positioned at its place of installation until all fastening screws have been tightened.

- The fan must not be strained on fastening.

4.2 Electrical connection



DANGER
Voltage on the device
Electric shock

→ Always connect a protective earth first.

→ Check the protective earth.



DANGER
Faulty insulation
Risk of fatal injury from electric shock

→ Use only cables that meet the specified installation regulations for voltage, current, insulation material, capacity, etc.

→ Route cables so that they cannot be touched by any rotating parts.



DANGER
Electrical charge (>50 µC) between phase conductor and protective earth connection after switching off supply with multiple devices connected in parallel.
Electric shock, risk of injury

→ Ensure sufficient protection against accidental contact. Before working on the electrical hookup, short the supply and PE connections.

CAUTION
Voltage
The fan is a built-in component and has no disconnecting switch.

→ Only connect the fan to circuits that can be switched off with an all-pole disconnection switch.

→ When working on the fan, secure the system/machine in which the fan is installed so as to prevent it from being switched back on.

NOTE
Water ingress into wires or cables
Water ingress at the customer end of the cable can damage the device.

→ Make sure the end of the cable is connected in a dry environment.



Only connect the device to circuits that can be switched off with an all-pole disconnection switch.

4.2.1 Requirements

⇒ Check whether the information on the nameplate matches the connection data.

⇒ Before connecting the device, make sure the power supply matches the device voltage.

⇒ Only use cables designed for the current level indicated on the nameplate.
For determining the cross-section, note the sizing criteria according to EN 61800-5-1. The protective earth must have a cross-section equal to or greater than that of the phase conductor.
We recommend the use of 105 °C cables. Ensure that the minimum cable cross-section is at least
AWG 26 / 0.13 mm².

Protective earth contact resistance according to EN 60335

Compliance with the resistance specifications according to EN 60335 for the protective earth connection circuit must be verified in the end application. Depending on the installation situation, it may be necessary to connect an additional protective earth conductor by way of the extra protective earth terminal provided on the device.

4.2.2 Reactive currents



Because of the EMC filter integrated for compliance with EMC limits (interference emission and immunity to interference), reactive currents can be measured in the supply line even when the motor is at a standstill and the line voltage is switched on.

- The values are typically in the range < 50 mA
- At the same time, the effective power in this operating state (operational readiness) is typically < 2 W.

4.2.3 Residual current circuit breaker (RCCB)

If the use of a residual current device (RCD) is required in your installation, only pulse-current sensitive and/or AC/DC-sensitive residual current devices (type F or B) are permissible. As with variable frequency drives, residual current devices cannot provide personal safety while the device is being operated. When the device power supply is switched on, pulsed charging currents from the capacitors in the integrated EMC filter can lead to the residual current devices tripping instantly. We recommend the use of residual current circuit

Translation of the original operating instructions

breakers (RCCB) with a trip threshold of 300 mA and delayed tripping (super-resistant, characteristic K).

4.2.4 Locked-rotor protection



Due to the locked-rotor protection, the starting current (LRA) is equal to or less than the nominal current (FLA).

4.3 Connecting the cables

The device has external leads.

⇒ First connect the "PE" (protective earth).

- Connect the cables according to your application. When doing so, observe Chapter 4.4 Connection diagram.

Translation of the original operating instructions

ebm-papst Mulfingen GmbH & Co. KG · Bachmühle 2 · D-74673 Mulfingen · Phone +49 (0) 7938 81-0 · Fax +49 (0) 7938 81-110 · info1@de.ebmpapst.com · www.ebmpapst.com

4.4 Connection diagram

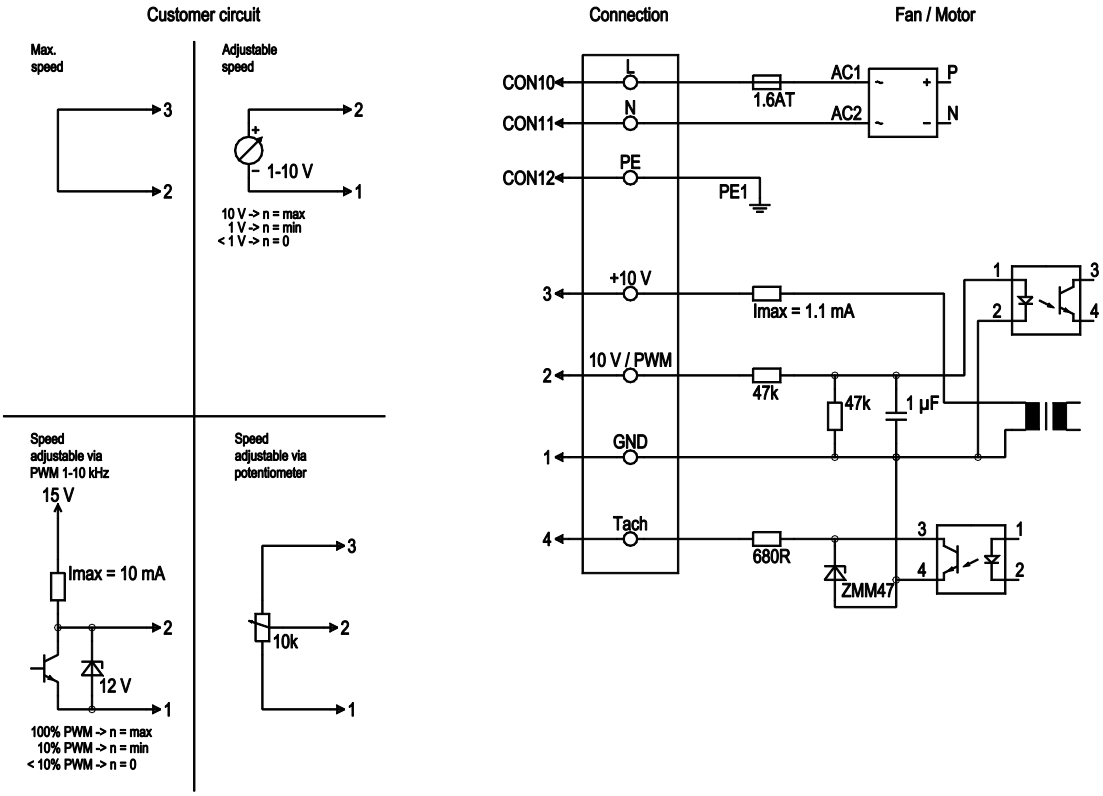

Drawing preliminary!

No.	Conn.	Designation	Color	Function/assignment
	CON10	**L**	black	Power supply 230 VAC, 50-60 Hz, see nameplate for voltage range
	CON11	**N**	blue	Neutral conductor
	CON12	**PE**	green/ yellow	Protective earth
	1	**GND**	blue	GND connection for control interface
	2	**0- 10V PWM**	yellow	Control input 0-10 V or PWM, electrically isolated
	3	**10V/ max 1.1mA**	red	Voltage output 10 V / 1.1 mA, electrically isolated, not short-circuit-proof.
	4	**Tach**	white	Tach output: open collector, 1 pulse per revolution, electrically isolated

Translation of the original operating instructions

ebm-papst Mulfingen GmbH & Co. KG · Bachmühle 2 · D-74673 Mulfingen · Phone +49 (0) 7938 81-0 · Fax +49 (0) 7938 81-110 · info1@de.ebmpapst.com · www.ebmpapst.com

4.5 Checking connections

⇒ Ensure isolation from supply (all phases).

⇒ Make sure a restart is impossible

⇒ Check the cables for proper fit.

4.6 Switching on the device

The device may only be switched on if it has been installed properly and in accordance with its intended use, including the required safety mechanisms and professional electrical hookup. This also applies for devices which have already been equipped with plugs and terminals or similar connectors by the customer.



WARNING
Hot motor housing
Risk of fire

→ Ensure that no combustible or flammable materials are located close to the fan.

⇒ Before switching on, check the device for visible external damage and make sure the protective devices are functional.

⇒ Check the fan's air flow paths for foreign matter and remove any foreign matter found.

⇒ Apply the nominal supply voltage.

⇒ Start the device by changing the input signal.



NOTE
Damage to the device from vibration
Bearing damage, shorter service life

→ Low-vibration operation of the fan must be ensured over the entire speed control range.

→ Severe vibration can arise for instance from inexpert handling, transportation damage and resultant imbalance or be caused by component or structural resonance.

→ Speed ranges with excessively high vibration levels and possibly resonant frequencies must be determined in the course of fan commissioning.

→ Either run through the resonant range as quickly as possible with speed control or find another remedy.

→ Operation with excessively high vibration levels can lead to premature failure.

4.7 Switching off the device

Switching off the device during operation:

⇒ Switch off the device via the control input.

⇒ Do not switch the motor (e.g. in cyclic operation) on and off via power supply.

Switching off the device for maintenance:

⇒ Switch off the device via the control input.

⇒ Do not switch the motor (e.g. in cyclic operation) on and off via power supply.

⇒ Disconnect the device from the power supply.

⇒ When disconnecting, be sure to disconnect the ground connection last.

5. INTEGRATED PROTECTIVE FEATURES

The integrated protective functions cause the motor to switch off automatically in the event of the faults described in the table.

Fault	Safety feature description/ function
Rotor position detection error	An automatic restart follows.
Blocked rotor	⇒ After the blockage is removed, the motor restarts automatically.
Line undervoltage (line voltage outside of permitted nominal voltage range)	⇒ If the line voltage returns to permitted values, the motor restarts automatically.

6. MAINTENANCE, MALFUNCTIONS, POSSIBLE CAUSES AND REMEDIES

Do not perform any repairs on your device. Send the device to ebm-papst for repair or replacement.



WARNING
Live terminals and connections even with device switched off
Electric shock

→ Wait five minutes after disconnecting the voltage at all poles before opening the device.

CAUTION
If control voltage or a stored speed set value is applied, the motor will restart automatically, e.g. after a power failure.
Risk of injury

→ Keep out of the device's danger zone.

→ When working on the device, switch off the line voltage and ensure that it cannot be switched back on.

→ Wait until the device comes to a stop.

→ After working on the device, remove any tools or other objects from the device.



If the device is out of use for some time, e.g. when in storage, we recommend switching it on for at least two hours to allow any condensation to evaporate and to move the bearings.

Malfunction/fault	Possible cause	Possible remedy
Impeller not running smoothly	Imbalance in rotating parts	Clean the device; replace it if imbalance persists after cleaning. Make sure no weight clips are removed during cleaning.
Motor not turning	Mechanical blockage	Switch off, isolate from supply and remove mechanical blockage.
	Line voltage faulty	Check line voltage, restore power supply, apply control signal.

Translation of the original operating instructions

ebm-papst Mulfingen GmbH & Co. KG · Bachmühle 2 · D-74673 Mulfingen · Phone +49 (0) 7938 81-0 · Fax +49 (0) 7938 81-110 · info1@de.ebmpapst.com · www.ebmpapst.com

	Faulty connection	Isolate from supply, correct connection; see connection diagram.
Motor/electronics overtemperature	Deficient cooling	Improve cooling. Let the device cool down. To reset the error message, switch off the line voltage for at least 25 s and then switch it on again.
	Ambient temperature too high	Reduce the ambient temperature. Reset by reducing control input to 0.
	Impermissible point of operation	Correct the operating point. Let the device cool down.

In the event of further malfunctions, contact ebm-papst.

6.1 Cleaning

To ensure a long service life, check the fans regularly for proper operation and soiling. The frequency of checking is to be adapted accordingly depending on the degree of soiling.

DANGER
Risk of injury from rotating fan.

→ Only clean when not in motion. Do not disconnect the fan from the power supply, just switch it off via the control input. This will prevent start-up of the fan.

⇒ Dirt deposits on the motor housing can cause overheating of the motor.

⇒ Soiling of the impeller can cause vibration that will shorten the service life of the fan.

⇒ Severe vibration can destroy the fan.

⇒ In such cases, switch off the fan immediately and clean it.

⇒ The preferred method of cleaning is dry cleaning, e.g. using compressed air.

⇒ Do not use aggressive cleaning agents!

NOTE
Damage to the device during cleaning
Malfunction possible

→ Do not clean the device using a water jet or high-pressure cleaner.

→ Do not use any acid, alkali or solvent-basedcleaning agents.

→ Do not use any pointed or sharp-edged objects for cleaning

⇒ Completely remove any cleaning agents used.

⇒ If severe corrosion is visible on load-bearing or rotating parts, switch off the device immediately and replace it.

⇒ Repair of load-bearing or rotating parts is not permitted!

⇒ Operate the fan for 2 hours at maximum speed so that any water that has ingressed can evaporate.

⇒ If cleaning does not eliminate vibrations, the fan may need to be rebalanced. To have it rebalanced, contact ebm-papst.

⇒ The fan is equipped with maintenance-free ball bearings. The lifetime lubrication of the ball bearings is designed for a service life of 40,000 hours.

⇒ If bearing replacement is necessary after that period, contact ebm-papst.

⇒ Adapt the maintenance intervals to the actual level of dust exposure.

6.2 Safety inspection

NOTE
High-voltage test
The integrated EMC filter has Y capacitors. The tripping current is exceeded when AC testing voltage is applied.

→ Test the device with DC voltage when you perform the legally required high-voltage test. The voltage to be used corresponds to the peak value of the AC voltage required by the standard.

What to check	How to check	How often	What action?
Contact protection cover for intactness or damage	Visual inspection	At least every 6 months	Repair or replacement of device
Device for damage to blades and housing	Visual inspection	At least every 6 months	Replacement of device
Fastening the cables	Visual inspection	At least every 6 months	Fasten
Fastening the protective earth terminal	Visual inspection	At least every 6 months	Fasten
Insulation of cables for damage	Visual inspection	At least every 6 months	Replace cables
Impeller for wear/deposits/ corrosion and damage	Visual inspection	At least every 6 months	Clean impeller or replace device
Abnormal bearing noise	acoustic	At least every 6 months	Replace device

6.3 Disposal

For ebm-papst, environmental protection and resource preservation are top priority corporate goals.
ebm-papst operates an environmental management system which is certified in accordance with ISO 14001 and rigorously implemented around the world on the basis of German standards.
Right from the development stage, ecological design, technical safety and health protection are fixed criteria.
The following section contains recommendations for ecological disposal of the product and its components.

Translation of the original operating instructions

ebm-papst Mulfingen GmbH & Co. KG · Bachmühle 2 · D-74673 Mulfingen · Phone +49 (0) 7938 81-0 · Fax +49 (0) 7938 81-110 · info1@de.ebmpapst.com · www.ebmpapst.com

6.3.1 Country-specific legal requirements

NOTE
Country-specific legal requirements
Always observe the applicable country-specific legal regulations with regard to the disposal of products or waste occurring in the various phases of the life cycle. The corresponding disposal standards are also to be heeded.

6.3.2 Disassembly

Disassembly of the product must be performed or supervised by qualified personnel with the appropriate technical knowledge.
The product is to be disassembled into suitable components for disposal employing standard procedures for motors.

WARNING
Heavy parts of the product may drop off. Some of the product components are heavy. These components could drop off during disassembly.
This can result in fatal or serious injury and material damage.
→ Secure components before unfastening to stop them falling.

6.3.3 Component disposal

The products are mostly made of steel, copper, aluminum and plastic. Metallic materials are generally considered to be fully recyclable.
Separate the components for recycling into the following categories:

- Steel and iron
- Aluminum
- Non-ferrous metal, e.g. motor windings
- Plastics, particularly with brominated flame retardants, in accordance with marking
- Insulating materials
- Cables and wires
- Electronic scrap, e.g. circuit boards

Only ferrite magnets and not rare earth magnets are used in external rotor motors from ebm-papst Mulfingen GmbH & Co. KG.

⇒ Ferrite magnets can be disposed of in the same way as normal iron and steel.

Electrical insulating materials on the product, in cables and wires are made of similar materials and are therefore to be treated in the same manner.
The materials concerned are as follows:

- Miscellaneous insulators used in the terminal box
- Power cables
- Cables for internal wiring
- Electrolytic capacitors

Dispose of electronic components employing the proper procedures for electronic scrap.

→ Please contact ebm-papst for any other questions on disposal.

Translation of the original operating instructions

ebm-papst Mulfingen GmbH & Co. KG · Bachmühle 2 · D-74673 Mulfingen · Phone +49 (0) 7938 81-0 · Fax +49 (0) 7938 81-110 · info1@de.ebmpapst.com · www.ebmpapst.com