R3G450-RJ74-21

EC centrifugal fan - RadiCal

backward-curved, single-intake

ebm-papst Mulfingen GmbH & Co. KG
Bachmühle 2 · D-74673 Mulfingen
Phone +49 7938 81-0
Fax +49 7938 81-110
info1@de.ebmpapst.com
www.ebmpapst.com

Limited partnership · Headquarters Mulfingen
Amtsgericht (court of registration) Stuttgart · HRA 590344

General partner Elektrobau Mulfingen GmbH · Headquarters Mulfingen
Amtsgericht (court of registration) Stuttgart · HRB 590142

Nominal data

Type	**R3G450-RJ74-21**
Motor	**M3G112-EA**

Phase		1~
Nominal voltage	VAC	230
Nominal voltage range	VAC	200 .. 277
Frequency	Hz	50/60
Method of obtaining data		ml
Speed (rpm)	min^{-1}	1440
Power consumption	W	750
Current draw	A	3.3
Min. ambient temperature	°C	-25
Max. ambient temperature	°C	60
Starting current	A	4.8

ml = Max. load · me = Max. efficiency · fa = Free air · cs = Customer specification · ce = Customer equipment
Subject to change

Data according to Commission Regulation (EU) 327/2011 (prEN 17166)

		Actual	Req. 2015
01 Overall efficiency η_{es}	%	64.1	50.3
02 Measurement category		A	
03 Efficiency category		Static	
04 Efficiency grade N		75.8	62
05 Variable speed drive		Yes	

09 Power consumption P_{ed}	kW	0.76
09 Air flow q_v	m³/h	4110
09 Pressure increase p_{fs}	Pa	392
10 Speed (rpm) n	min^{-1}	1440
11 Specific ratio*		1.00

Data obtained at optimum efficiency level.

* Specific ratio = 1 + p_{fs} / 100 000 Pa

LU-152165

The efficiency values displayed for achieving conformity with the Ecodesign Regulation EU 327/2011 has been reached with defined air duct components (e.g. inlet rings).
The dimensions must be requested from ebm-papst. If other air conduction geometries are used on the installation side, the ebm-papst evaluation loses its validity/the conformity must be confirmed again.

The product does not fall within the scope of Regulation (EU) 2019/1781 due to the exception specified in Article 2 (2a) (motors completely integrated into a product).

EC centrifugal fan - RadiCal

backward-curved, single-intake

Technical description

Weight	9.24 kg
Size	450 mm
Motor size	112
Rotor surface	Painted black
Electronics housing material	Die-cast aluminum
Impeller material	PP plastic
Number of blades	6
Direction of rotation	Clockwise, viewed toward rotor
Degree of protection	IP55
Insulation class	"F"
Moisture (F) / Environmental (H) protection class	H1
Ambient temperature note	Occasional start-up between -40°C and -25°C is permissible. For continuous operation at temperatures below -25°C (e.g. refrigeration applications) we recommend our fan design with special low-temperature bearings.
Max. permitted ambient temp. for motor (transport/storage)	+80 °C
Min. permitted ambient temp. for motor (transport/storage)	-40 °C
Installation position	Shaft horizontal or rotor on bottom; rotor on top on request
Condensation drainage holes	On rotor side
Mode	S1
Motor bearing	Ball bearing
Technical features	- Output 10 VDC, max. 10 mA - Operation and alarm display - Alarm relay - Integrated PID controller - Power limiter - Motor current limitation - PFC, active - RS-485 MODBUS-RTU - Soft start - Control input 0-10 VDC / PWM - Control interface with SELV potential safely disconnected from the mains - Thermal overload protection for electronics/motor - Line undervoltage / phase failure detection
EMC immunity to interference	According to EN 61000-6-2 (industrial environment)
EMC circuit feedback	According to EN 61000-3-2/3
EMC interference emission	According to EN 61000-6-3 (household environment)
Touch current according to IEC 60990 (measuring circuit Fig. 4, TN system)	<= 3.5 mA
Motor protection	Thermal switch auto reset, internally connected
With cable	Variable
Protection class	I (with customer connection of protective earth)
Conformity with standards	EN 61800-5-1; EN 60335-1; UKCA; CE
Approval	UL 1004-7 + 60730-1; CSA C22.2 No. 77 + CAN/CSA-E60730-1; EAC

ebm-papst Mulfingen GmbH & Co. KG · Bachmühle 2 · D-74673 Mulfingen · Phone +49 (0) 7938 81-0 · Fax +49 (0) 7938 81-110 · info1@de.ebmpapst.com · www.ebmpapst.com

EC centrifugal fan - RadiCal

backward-curved, single-intake

Product drawing

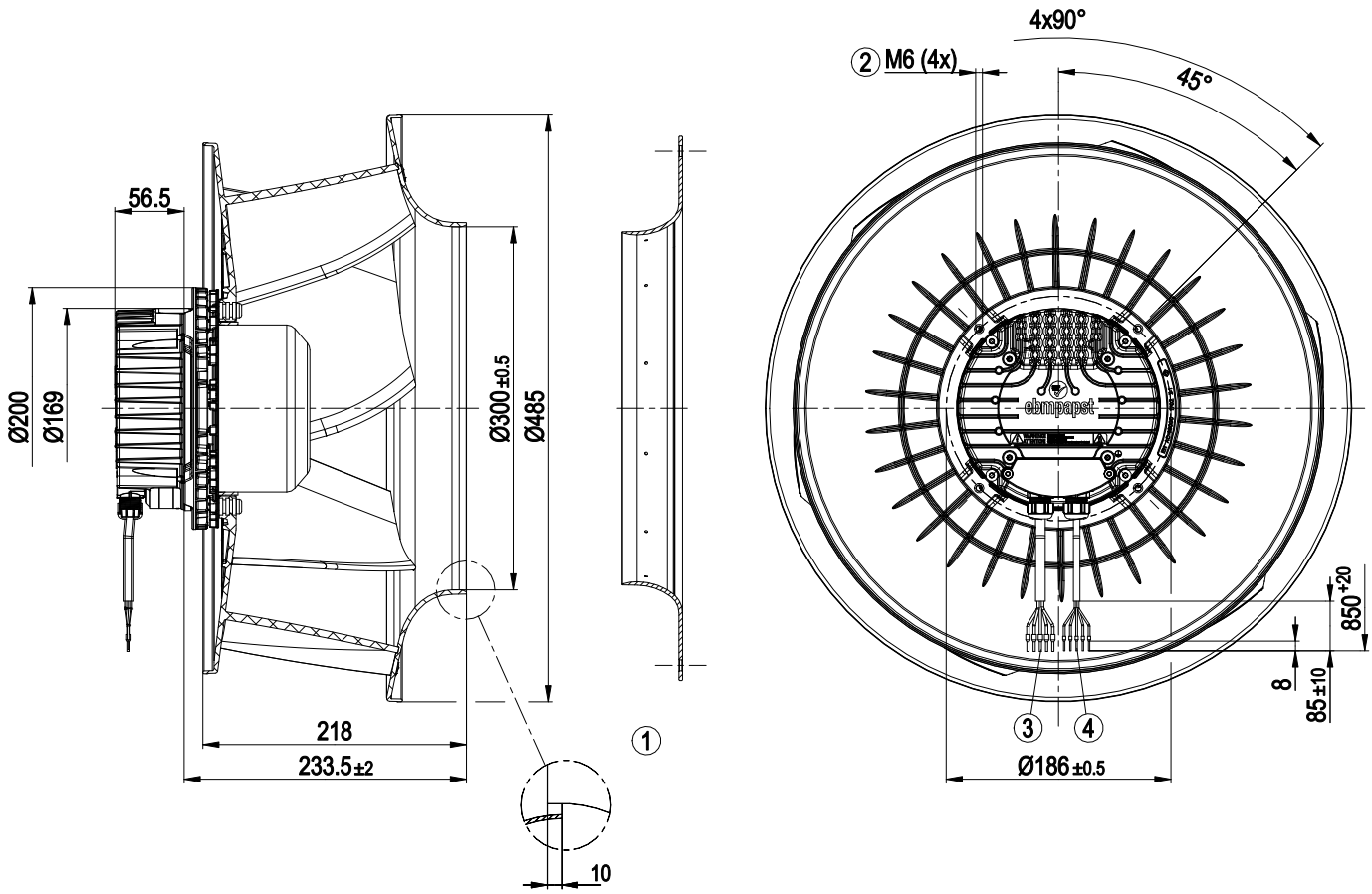

1	Accessory part: inlet ring 45901-2-2943 not included in scope of delivery
2	Max. clearance for screw 16 mm
3	Cable PVC AWG18
	5x wire-end ferrule
4	Cable PVC AWG22
	5x wire-end ferrule

ebm-papst Mulfingen GmbH & Co. KG · Bachmühle 2 · D-74673 Mulfingen · Phone +49 (0) 7938 81-0 · Fax +49 (0) 7938 81-110 · info1@de.ebmpapst.com · www.ebmpapst.com

Accessory part

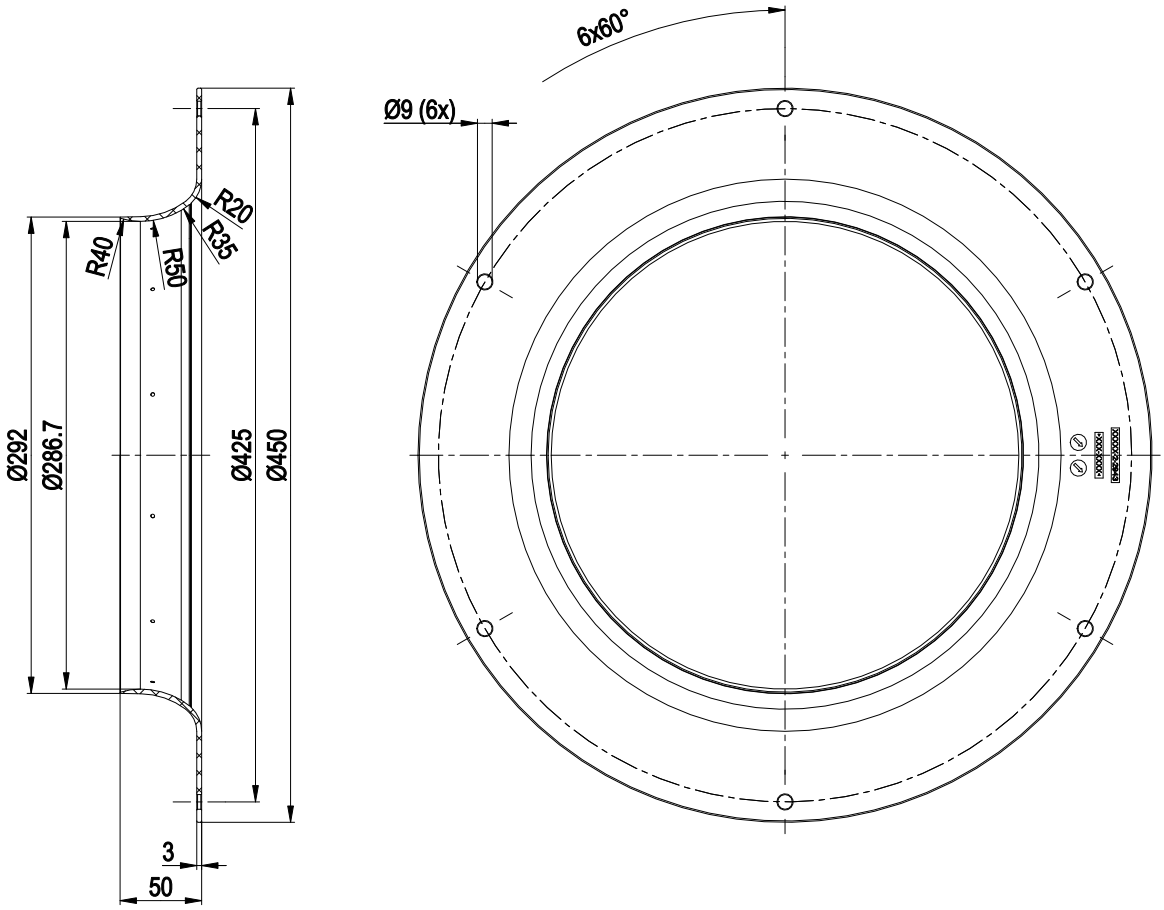

Inlet ring 45901-2-2943 not included in scope of delivery

ebm-papst Mulfingen GmbH & Co. KG · Bachmühle 2 · D-74673 Mulfingen · Phone +49 (0) 7938 81-0 · Fax +49 (0) 7938 81-110 · info1@de.ebmpapst.com · www.ebmpapst.com

EC centrifugal fan - RadiCal

backward-curved, single-intake

Connection diagram

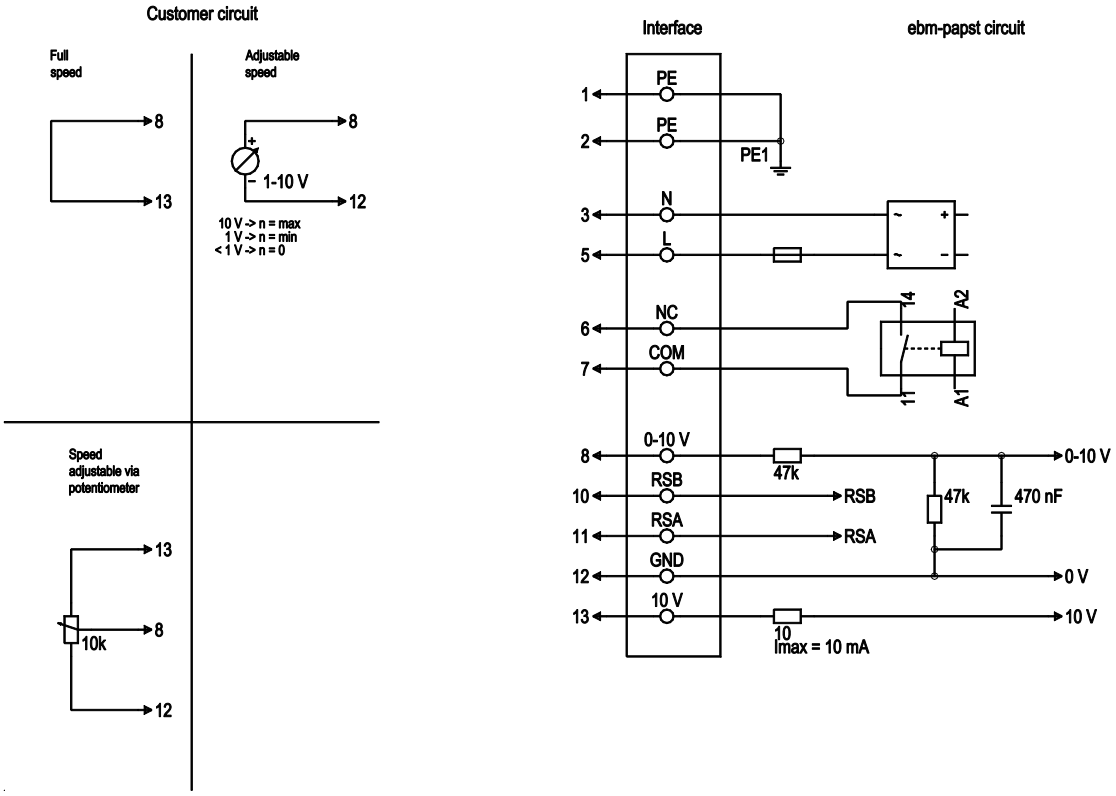

No.	Conn.	Designation	Color	Function/assignment
1	1, 2	PE	green/yellow	Protective earth
1	3	N	blue	Power supply, neutral conductor, 50/60 Hz
1	5	L	black	Power supply, phase, 50/60 Hz
1	6	NC	white 1	Status relay, floating status contact; break for failure, contact rating 250 VAC / 2A (AC1) / min. 10 mA, basic insulation on supply side and reinforced insulation on control interface side
1	7	COM	white 2	Status relay, floating status contact; common connection, contact rating 250 VAC / 2A (AC1) / min. 10 mA, basic insulation on supply side and reinforced insulation on control interface side
2	8	0-10V	yellow	Analog input (set value); 0-10 V; Ri = 100 kΩ; adjustable curve
2	10	RSB	brown	RS485 interface for MODBUS, RSB
2	11	RSA	white	RS485 interface for MODBUS, RSA
2	12	GND	blue	Reference ground for control interface, SELV
2	13	+10V	red	Fixed voltage output 10 VDC, +10 V ±3%; max. 10 mA; short-circuit-proof; power supply for external devices (e.g. pot)

ebm-papst Mulfingen GmbH & Co. KG · Bachmühle 2 · D-74673 Mulfingen · Phone +49 (0) 7938 81-0 · Fax +49 (0) 7938 81-110 · info1@de.ebmpapst.com · www.ebmpapst.com

EC centrifugal fan - RadiCal

backward-curved, single-intake

Curves: Air performance 50 Hz

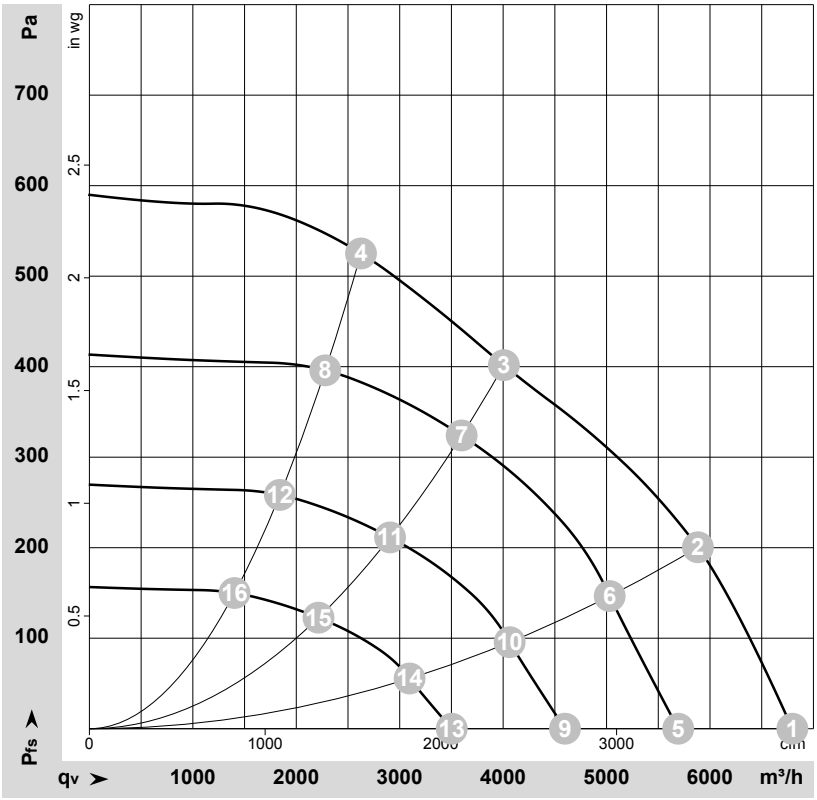

ρ = 1.15 kg/m³ ± 2 %

Measurement: LU-152165-1
Date: 2013-01-15
Nozzle: 45900-2-2943

Air performance measured according to ISO 5801 installation category A. For detailed information on the measurement setup, contact ebm-papst. Intake sound level: Sound power level according to ISO 13347 / sound pressure level measured at 1 m distance from fan axis. The values given are valid under the specified measuring conditions and may vary due to conditions of installation. For deviations from the standard configuration, the parameters have to be checked on the installed unit.

Measured values

	U	f	n	P_{ed}	I	LpA_{in}	LwA_{in}	LwA_{out}	q_V	p_{fs}	q_V	p_{fs}
	V	Hz	min^{-1}	W	A	dB(A)	dB(A)	dB(A)	m^3/h	Pa	cfm	in. wg
1	230	50	1550	574	2.56	70	79	86	6795	0	4000	0.00
2	230	50	1520	743	3.29	69	77	84	5885	200	3465	0.80
3	230	50	1440	750	3.30	64	72	78	4005	400	2360	1.61
4	230	50	1495	750	3.30	68	76	82	2625	525	1545	2.11
5	230	50	1300	337	1.51	66	74	81	5695	0	3350	0.00
6	230	50	1300	464	2.05	65	73	80	5030	146	2960	0.59
7	230	50	1300	555	2.45	61	69	76	3600	325	2120	1.30
8	230	50	1300	503	2.22	64	72	78	2280	398	1340	1.60
9	230	50	1050	178	0.79	61	69	76	4600	0	2705	0.00
10	230	50	1050	244	1.08	60	68	75	4065	96	2390	0.39
11	230	50	1050	292	1.29	56	64	70	2905	212	1710	0.85
12	230	50	1050	265	1.17	59	67	73	1840	260	1085	1.04
13	230	50	800	79	0.35	54	62	69	3505	0	2060	0.00
14	230	50	800	108	0.48	53	61	68	3095	55	1820	0.22
15	230	50	800	129	0.57	49	57	64	2215	123	1305	0.49
16	230	50	800	117	0.52	52	60	66	1405	151	825	0.61

U = Voltage · f = Frequency · n = Speed (rpm) · P_{ed} = Power consumption · I = Current draw · LpA_{in} = Sound pressure level intake side · LwA_{in} = Sound power level intake side
LwA_{out} = Sound power level outlet side · q_V = Air flow · p_{fs} = Pressure increase

ebm-papst Mulfingen GmbH & Co. KG · Bachmühle 2 · D-74673 Mulfingen · Phone +49 (0) 7938 81-0 · Fax +49 (0) 7938 81-110 · info1@de.ebmpapst.com · www.ebmpapst.com