R1G146-AA11-52

EC centrifugal fan

forward-curved, single-intake

ebm-papst Mulfingen GmbH & Co. KG
Bachmühle 2 · D-74673 Mulfingen
Phone +49 7938 81-0
Fax +49 7938 81-110
info1@de.ebmpapst.com
www.ebmpapst.com

Limited partnership · Headquarters Mulfingen
Amtsgericht (court of registration) Stuttgart · HRA 590344

General partner Elektrobau Mulfingen GmbH · Headquarters Mulfingen
Amtsgericht (court of registration) Stuttgart · HRB 590142

Nominal data

Type	**R1G146-AA11-52**
Motor	**M1G074-BF**

Nominal voltage	VDC	48
Nominal voltage range	VDC	36 .. 57

Method of obtaining data		fa
Speed (rpm)	min^{-1}	2150
Power consumption	W	100
Current draw	A	2.6
Min. ambient temperature	°C	-25
Max. ambient temperature	°C	60

ml = Max. load · me = Max. efficiency · fa = Free air · cs = Customer specification · ce = Customer equipment
Subject to change

EC centrifugal fan

forward-curved, single-intake

Technical description

Weight	1.4 kg
Size	146 mm
Motor size	74
Impeller material	Sheet steel, galvanized
Direction of rotation	Clockwise, viewed toward rotor
Degree of protection	IP42
Insulation class	"B"
Moisture (F) / Environmental (H) protection class	H0 - dry environment
Max. permitted ambient temp. for motor (transport/storage)	+80 °C
Min. permitted ambient temp. for motor (transport/storage)	-40 °C
Installation position	Any
Mode	S1
Motor bearing	Ball bearing
Technical features	- Tach output - Motor current limitation - Soft start - Control input 0-10 VDC / PWM - Reverse polarity protection
EMC immunity to interference	According to EN 61000-6-2 (industrial environment)
EMC interference emission	According to EN 55022 (Class B, household environment)
With cable	Variable
Protection class assignment	III; Requires supply with safety extra-low voltage SELV. This component for installation may have several local protection classes. This information relates to this component's basic design. The final protection class is based on the component's intended installation and connection. If there is a PE connection point on the housing, it must not be visible after installation.
Approval	UL 1004-1; EAC; CSA C22.2 No. 77

ebm-papst Mulfingen GmbH & Co. KG · Bachmühle 2 · D-74673 Mulfingen · Phone +49 (0) 7938 81-0 · Fax +49 (0) 7938 81-110 · info1@de.ebmpapst.com · www.ebmpapst.com

EC centrifugal fan

forward-curved, single-intake

Product drawing

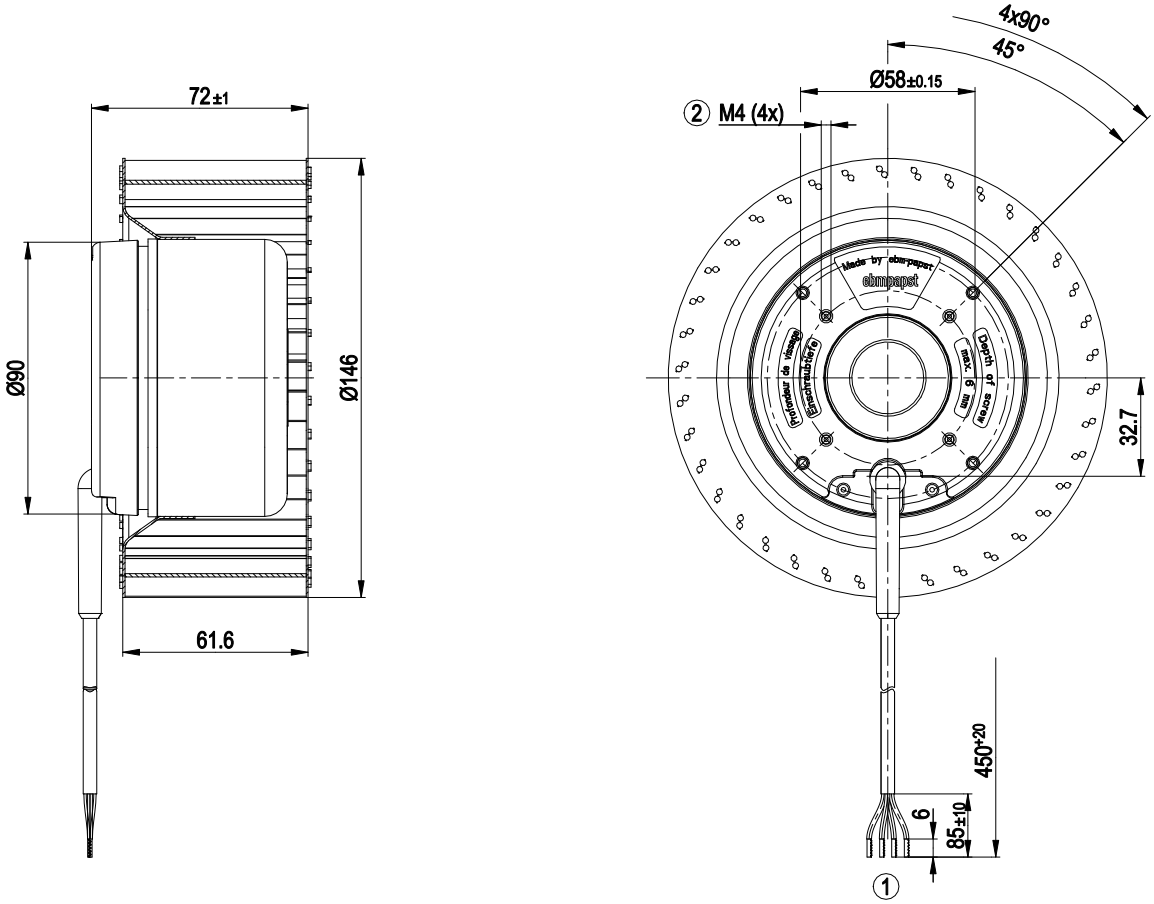

1	Cable PVC AWG20, 4x crimped splices
2	Max. clearance for screw 6 mm

ebm-papst Mulfingen GmbH & Co. KG · Bachmühle 2 · D-74673 Mulfingen · Phone +49 (0) 7938 81-0 · Fax +49 (0) 7938 81-110 · info1@de.ebmpapst.com · www.ebmpapst.com

EC centrifugal fan

forward-curved, single-intake

Connection diagram

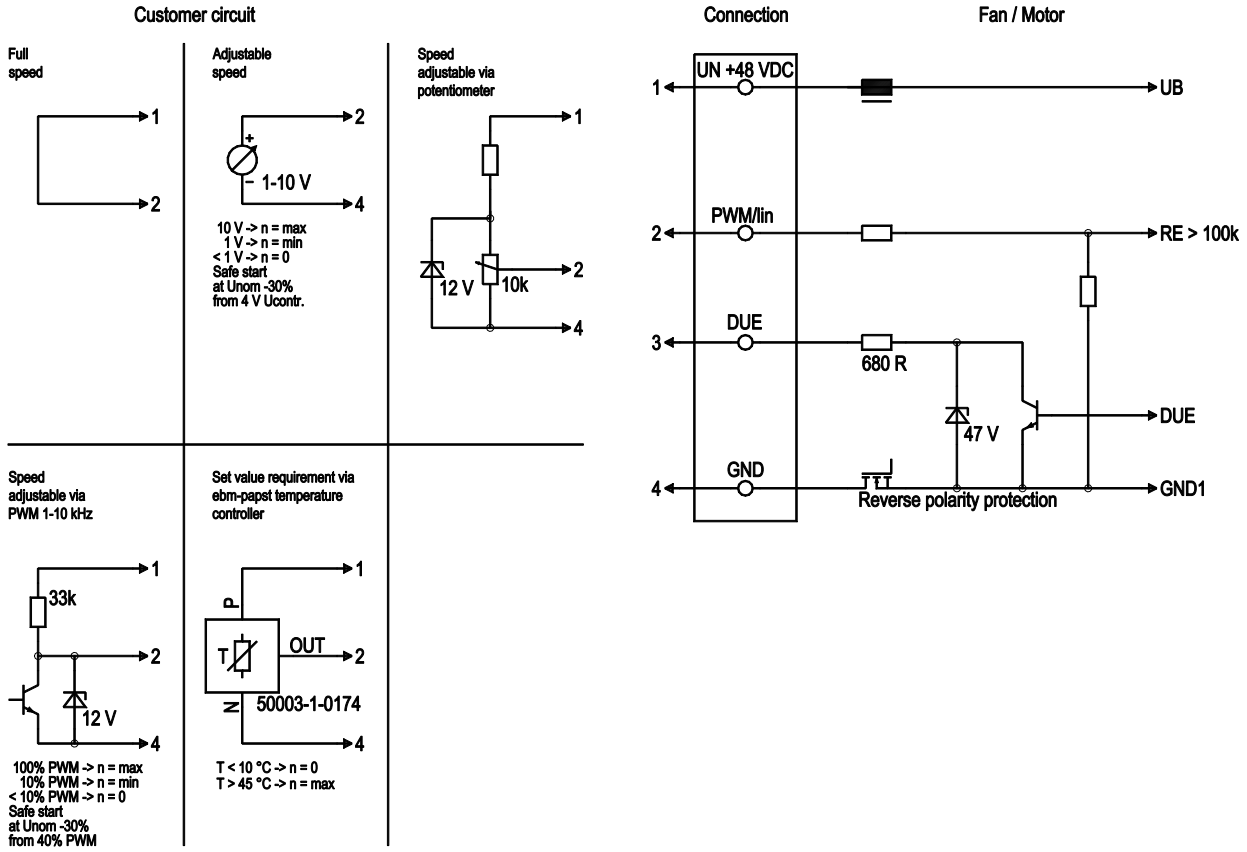

No.	Conn.	Designation	Color	Function/assignment
1	1	Un +48 VDC	red	Power supply 48 VDC, maximum ripple 3.5%
1	2	0-10 VDC	yellow	Control input Re > 100k
1	3	Tach	white	Tach output, 3 pulses per revolution, Isink max = 10 mA
1	4	GND	blue	Reference ground

ebm-papst Mulfingen GmbH & Co. KG · Bachmühle 2 · D-74673 Mulfingen · Phone +49 (0) 7938 81-0 · Fax +49 (0) 7938 81-110 · info1@de.ebmpapst.com · www.ebmpapst.com

EC centrifugal fan

forward-curved, single-intake

Curves: Air performance

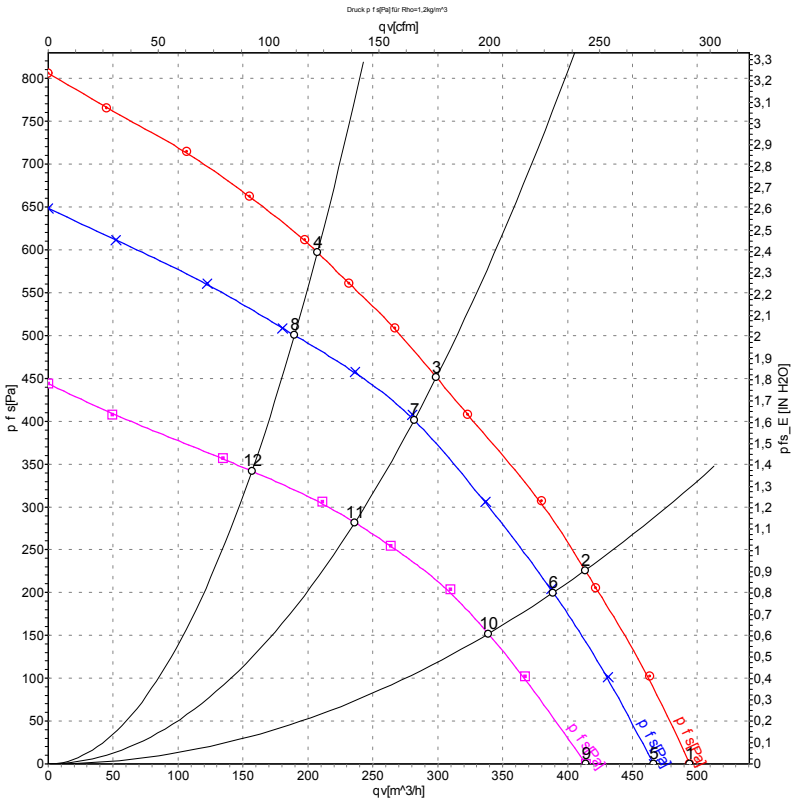

Measurement: LU-47300-1
Measurement: LU-47299-1
Measurement: LU-47301-1

Air performance measured according to ISO 5801 installation category A. For detailed information on the measurement setup, contact ebm-papst. Intake sound level: Sound power level according to ISO 13347 / sound pressure level measured at 1 m distance from fan axis. The values given are valid under the specified measuring conditions and may vary due to conditions of installation. For deviations from the standard configuration, the parameters have to be checked on the installed unit.

Measured values

	U	n	P_{ed}	I	q_V	p_{fs}	q_V	p_{fs}
	V	min^{-1}	W	A	m^3/h	Pa	cfm	in. wg
1	56	2295	120	2.84	495	0	290	0.00
2	56	2535	113	2.54	415	226	245	0.91
3	56	2910	105	2.21	300	451	175	1.81
4	56	3270	99	2.00	205	598	120	2.40
5	48	2150	100	2.60	465	0	275	0.00
6	48	2385	94	2.32	390	200	230	0.80
7	48	2725	87	2.06	280	400	165	1.61
8	48	2990	76	1.76	190	500	110	2.01
9	36	1930	69	2.18	415	0	245	0.00
10	36	2100	63	1.96	340	152	200	0.61
11	36	2315	53	1.63	235	282	140	1.13
12	36	2495	45	1.40	155	342	90	1.37

U = Voltage · n = Speed (rpm) · P_{ed} = Power consumption · I = Current draw · q_V = Air flow · p_{fs} = Pressure increase

ebm-papst Mulfingen GmbH & Co. KG · Bachmühle 2 · D-74673 Mulfingen · Phone +49 (0) 7938 81-0 · Fax +49 (0) 7938 81-110 · info1@de.ebmpapst.com · www.ebmpapst.com