D2E133-DM47-01

AC centrifugal fan

forward-curved, dual-intake

with housing (without flange)

ebm-papst Mulfingen GmbH & Co. KG
Bachmühle 2 · D-74673 Mulfingen
Phone +49 7938 81-0
Fax +49 7938 81-110
info1@de.ebmpapst.com
www.ebmpapst.com

Limited partnership · Headquarters Mulfingen
Amtsgericht (court of registration) Stuttgart · HRA 590344

General partner Elektrobau Mulfingen GmbH · Headquarters Mulfingen
Amtsgericht (court of registration) Stuttgart · HRB 590142

Nominal data

Type	**D2E133-DM47-01**
Motor	**M2E068-DF**

Phase		1~	1~
Nominal voltage	VAC	230	230
Frequency	Hz	50	60
Method of obtaining data		ml	ml
Valid for approval/standard		CE	CE
Speed (rpm)	min^{-1}	1650	2200
Power consumption	W	175	185
Current draw	A	0.78	0.82
Capacitor	µF	3	3
Capacitor voltage	VDB	450	450
Min. back pressure	Pa	100	250
Min. back pressure	in. wg	0.4	1
Min. ambient temperature	°C	-25	-25
Max. ambient temperature	°C	40	40
Starting current	A	0.86	0.88

ml = Max. load · me = Max. efficiency · fa = Free air · cs = Customer specification · ce = Customer equipment
Subject to change

AC centrifugal fan

forward-curved, dual-intake

with housing (without flange)

Technical description

Weight	3.73 kg
Size	133 mm
Motor size	68
Rotor surface	Partly cast in aluminum
Impeller material	Sheet steel, hot-dip galvanized
Housing material	Sheet steel, hot-dip galvanized
Direction of rotation	Clockwise, viewed toward rotor
Degree of protection	IP44; installation- and position-dependent
Insulation class	"B"
Moisture (F) / Environmental (H) protection class	H0 - dry environment
Max. permitted ambient temp. for motor (transport/storage)	+ 80 °C
Min. permitted ambient temp. for motor (transport/storage)	- 40 °C
Installation position	Any
Condensation drainage holes	None
Mode	Continuous operation (S1)
Motor bearing	Ball bearing
Touch current according to IEC 60990 (measuring circuit Fig. 4, TN system)	< 0.75 mA
Motor protection	Thermal overload protector (TOP) internally connected
With cable	Axial
Protection class	I (with customer connection of protective earth)
Conformity with standards	EN 60335-1; CE
Approval	CCC; EAC

ebm-papst Mulfingen GmbH & Co. KG · Bachmühle 2 · D-74673 Mulfingen · Phone +49 (0) 7938 81-0 · Fax +49 (0) 7938 81-110 · info1@de.ebmpapst.com · www.ebmpapst.com

AC centrifugal fan

forward-curved, dual-intake

with housing (without flange)

Product drawing

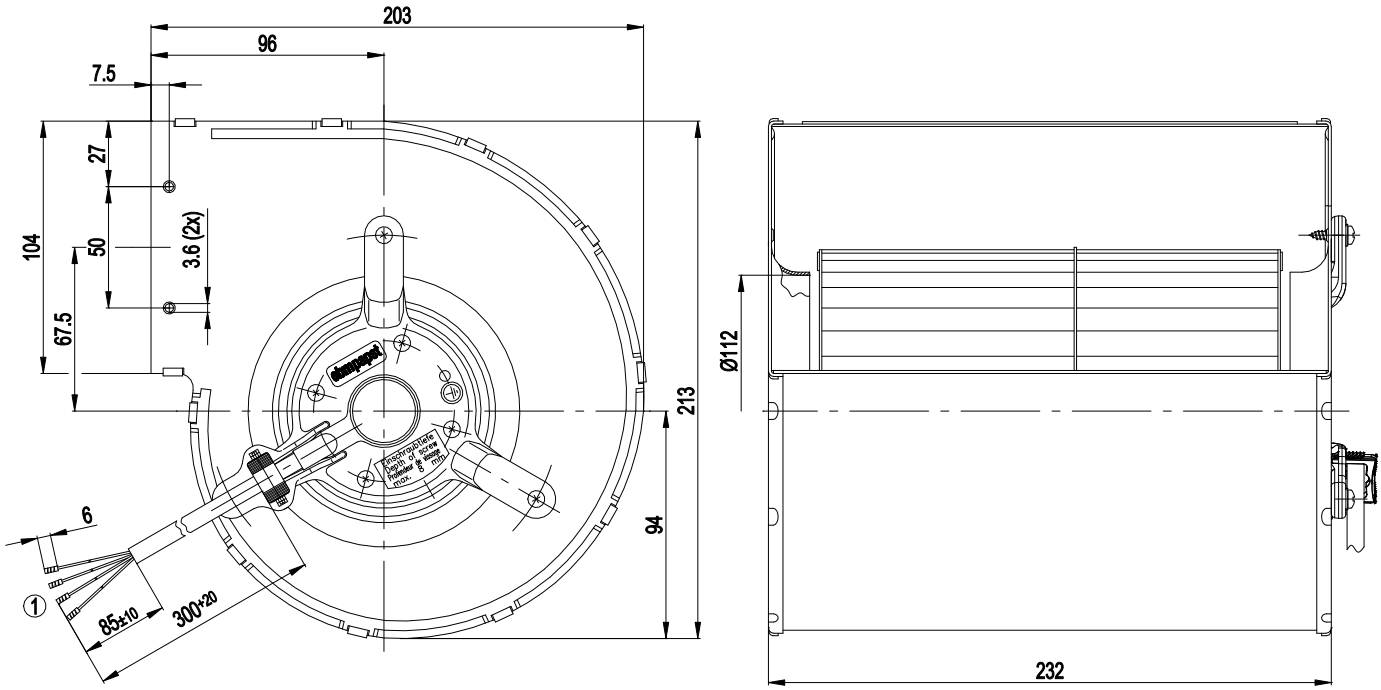

1	Cable PVC 0.5 mm², 4x crimped splices

Connection diagram

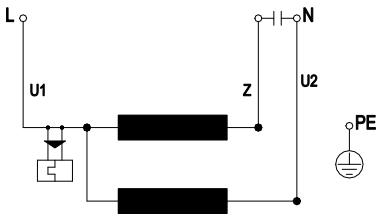

U1	blue	Z	brown	U2	black
PE	green/yellow				

ebm-papst Mulfingen GmbH & Co. KG · Bachmühle 2 · D-74673 Mulfingen · Phone +49 (0) 7938 81-0 · Fax +49 (0) 7938 81-110 · info1@de.ebmpapst.com · www.ebmpapst.com

AC centrifugal fan

forward-curved, dual-intake

with housing (without flange)

Curves: Air performance 50 Hz

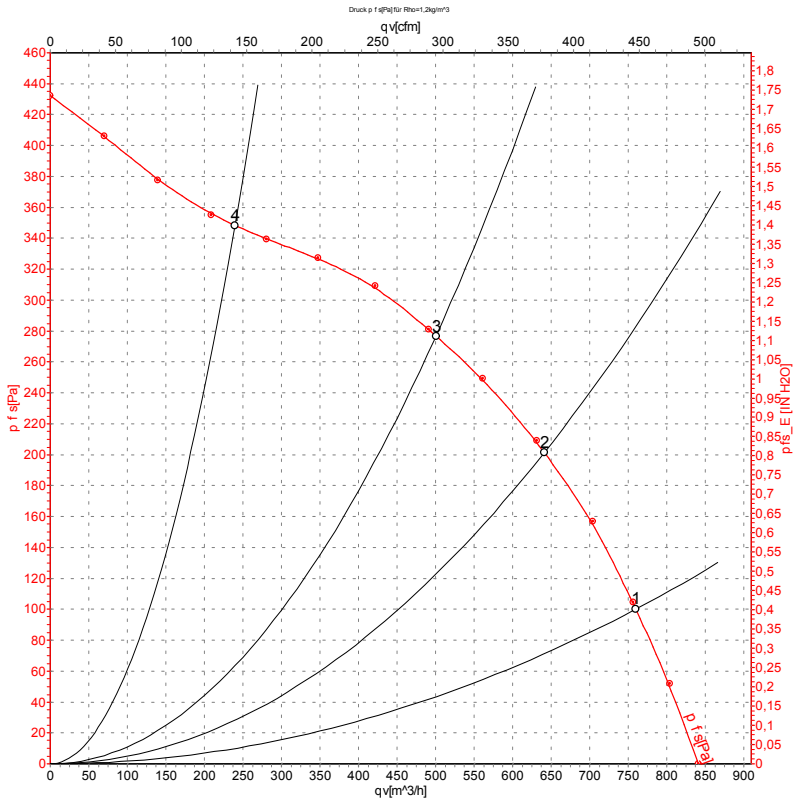

Measurement: LU-105266-1

Air performance measured according to ISO 5801 installation category A. For detailed information on the measurement setup, contact ebm-papst. Intake sound level: Sound power level according to ISO 13347 / sound pressure level measured at 1 m distance from fan axis. The values given are valid under the specified measuring conditions and may vary due to conditions of installation. For deviations from the standard configuration, the parameters have to be checked on the installed unit.

Measured values

	U	f	n	P_e	I	q_V	p_{fs}	q_V	p_{fs}
	V	Hz	min^{-1}	W	A	m^3/h	Pa	cfm	in. wg
1	230	50	1650	175	0.78	760	100	445	0.40
2	230	50	1990	162	0.70	640	200	375	0.80
3	230	50	2275	146	0.63	500	275	295	1.10
4	230	50	2530	125	0.54	240	350	140	1.41

U = Voltage · f = Frequency · n = Speed (rpm) · P_e = Power consumption · I = Current draw · q_V = Air flow · p_{fs} = Pressure increase

ebm-papst Mulfingen GmbH & Co. KG · Bachmühle 2 · D-74673 Mulfingen · Phone +49 (0) 7938 81-0 · Fax +49 (0) 7938 81-110 · info1@de.ebmpapst.com · www.ebmpapst.com

AC centrifugal fan

forward-curved, dual-intake

with housing (without flange)

Curves: Air performance 60 Hz

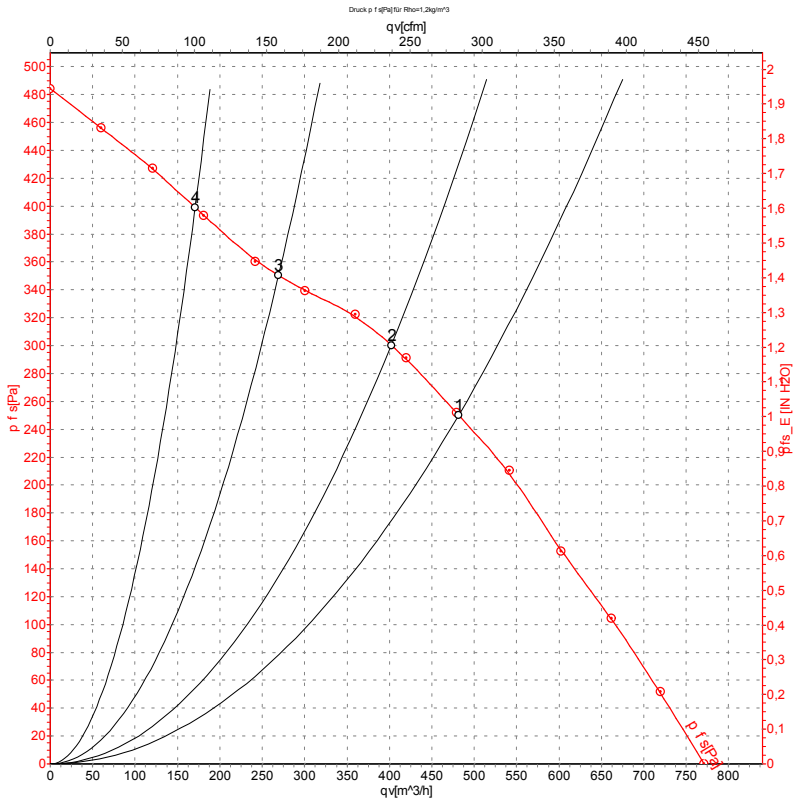

Measurement: LU-105267-1

Air performance measured according to ISO 5801 installation category A. For detailed information on the measurement setup, contact ebm-papst. Intake sound level: Sound power level according to ISO 13347 / sound pressure level measured at 1 m distance from fan axis. The values given are valid under the specified measuring conditions and may vary due to conditions of installation. For deviations from the standard configuration, the parameters have to be checked on the installed unit.

Measured values

	U	f	n	P_e	I	q_V	p_{fs}	q_V	p_{fs}
	V	Hz	min^{-1}	W	A	m^3/h	Pa	cfm	in. wg
1	230	60	2200	185	0.82	480	250	285	1.00
2	230	60	2360	181	0.78	400	300	235	1.20
3	230	60	2555	175	0.76	270	350	160	1.41
4	230	60	2685	171	0.74	170	400	100	1.61

U = Voltage · f = Frequency · n = Speed (rpm) · P_e = Power consumption · I = Current draw · q_V = Air flow · p_{fs} = Pressure increase

ebm-papst Mulfingen GmbH & Co. KG · Bachmühle 2 · D-74673 Mulfingen · Phone +49 (0) 7938 81-0 · Fax +49 (0) 7938 81-110 · info1@de.ebmpapst.com · www.ebmpapst.com