G2E120-CR21-01

AC centrifugal fan

forward-curved, single-intake

with housing (flange)

ebm-papst Mulfingen GmbH & Co. KG
Bachmühle 2 · D-74673 Mulfingen
Phone +49 7938 81-0
Fax +49 7938 81-110
info1@de.ebmpapst.com
www.ebmpapst.com

Limited partnership · Headquarters Mulfingen
Amtsgericht (court of registration) Stuttgart · HRA 590344

General partner Elektrobau Mulfingen GmbH · Headquarters Mulfingen
Amtsgericht (court of registration) Stuttgart · HRB 590142

Nominal data

Type	**G2E120-CR21-01**
Motor	**M2E068-BF**

Phase		1~	1~
Nominal voltage	VAC	230	230
Frequency	Hz	50	60
Method of obtaining data		fa	fa
Valid for approval/standard		CE	CE
Speed (rpm)	min^{-1}	2200	2050
Power consumption	W	83	100
Current draw	A	0.37	0.45
Capacitor	µF	2	2
Capacitor voltage	VDB	450	450
Capacitor standard		S0 (CE)	S0 (CE)
Min. back pressure	Pa	0	0
Min. back pressure	in. wg	0	0
Min. ambient temperature	°C	-25	-25
Max. ambient temperature	°C	50	45
Starting current	A	0.48	0.5

ml = Max. load · me = Max. efficiency · fa = Free air · cs = Customer specification · ce = Customer equipment
Subject to change

AC centrifugal fan

forward-curved, single-intake
with housing (flange)

Technical description

Weight	1.9 kg
Fan size	120 mm
Rotor surface	Unpainted
Impeller material	Sendzimir galvanized sheet steel
Housing material	Sendzimir galvanized sheet steel
Direction of rotation	Clockwise, viewed toward rotor
Degree of protection	IP44
Insulation class	"B"
Moisture (F) / Environmental (H) protection class	H0 - dry environment
Max. permitted ambient temp. for motor (transport/storage)	+ 80 °C
Min. permitted ambient temp. for motor (transport/storage)	- 40 °C
Installation position	Shaft horizontal
Condensation drainage holes	None
Mode	S1
Motor bearing	Ball bearing
Touch current according to IEC 60990 (measuring circuit Fig. 4, TN system)	< 0.75 mA
Motor protection	Thermal overload protector (TOP) internally connected
With cable	Axial
Protection class	I (with customer connection of protective earth)
Conformity with standards	EN 60335-1; CE
Approval	CCC; EAC

ebm-papst Mulfingen GmbH & Co. KG · Bachmühle 2 · D-74673 Mulfingen · Phone +49 (0) 7938 81-0 · Fax +49 (0) 7938 81-110 · info1@de.ebmpapst.com · www.ebmpapst.com

AC centrifugal fan

forward-curved, single-intake
with housing (flange)

Product drawing

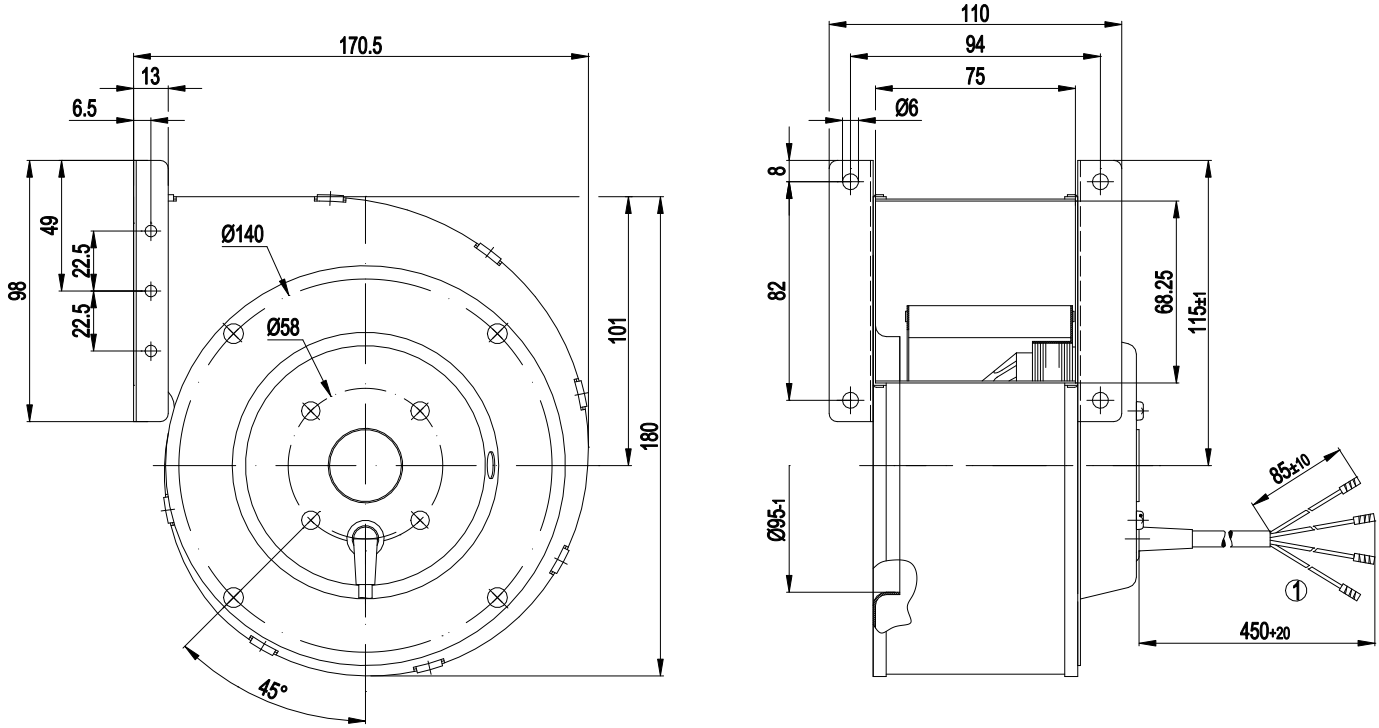

1	Cable PVC, 4x crimped splices

Connection diagram

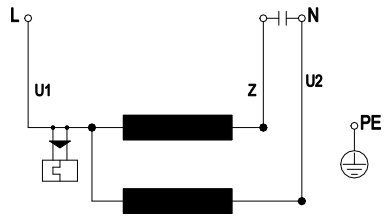

U1	blue	Z	brown	U2	black
PE	green/yellow				

ebm-papst Mulfingen GmbH & Co. KG · Bachmühle 2 · D-74673 Mulfingen · Phone +49 (0) 7938 81-0 · Fax +49 (0) 7938 81-110 · info1@de.ebmpapst.com · www.ebmpapst.com

AC centrifugal fan

forward-curved, single-intake

with housing (flange)

Curves: Air performance 50 Hz

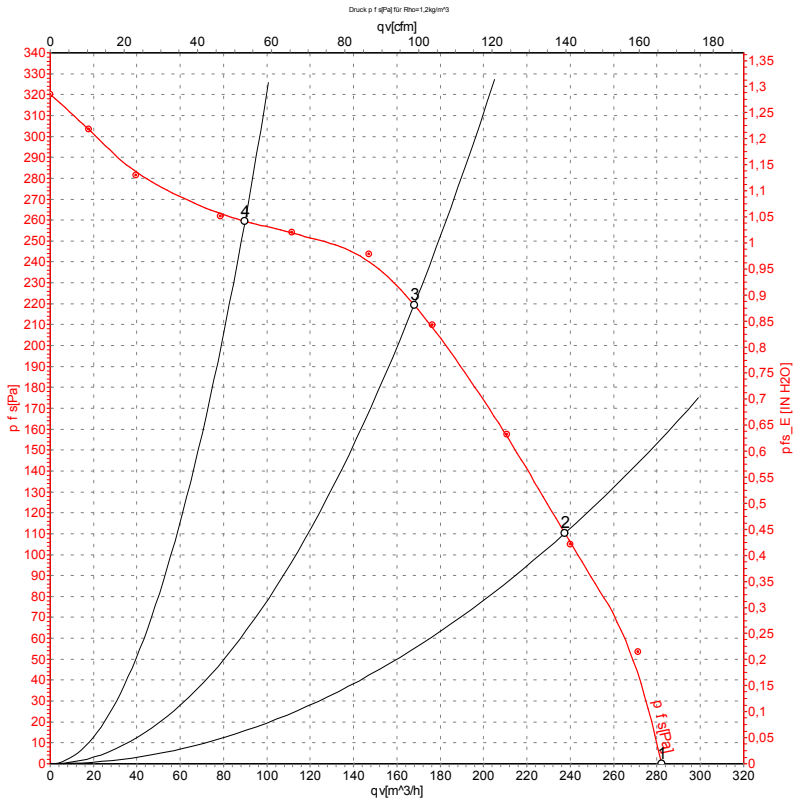

Measurement: LU-57078-1

Air performance measured according to ISO 5801 installation category A. For detailed information on the measurement setup, contact ebm-papst. Intake sound level: Sound power level according to ISO 13347 / sound pressure level measured at 1 m distance from fan axis. The values given are valid under the specified measuring conditions and may vary due to conditions of installation. For deviations from the standard configuration, the parameters have to be checked on the installed unit.

Measured values

	U	f	n	P_e	I	q_V	p_{fs}	q_V	p_{fs}
	V	Hz	min^{-1}	W	A	m^3/h	Pa	cfm	in. wg
1	230	50	2200	83	0.37	280	0	165	0.00
2	230	50	2375	79	0.34	235	110	140	0.44
3	230	50	2575	72	0.31	170	220	100	0.88
4	230	50	2740	65	0.29	90	260	55	1.04

U = Power supply · f = Frequency · n = Speed (rpm) · P_e = Power consumption · I = Current draw · q_V = Air flow · p_{fs} = Pressure increase

ebm-papst Mulfingen GmbH & Co. KG · Bachmühle 2 · D-74673 Mulfingen · Phone +49 (0) 7938 81-0 · Fax +49 (0) 7938 81-110 · info1@de.ebmpapst.com · www.ebmpapst.com

AC centrifugal fan

forward-curved, single-intake

with housing (flange)

Curves: Air performance 60 Hz

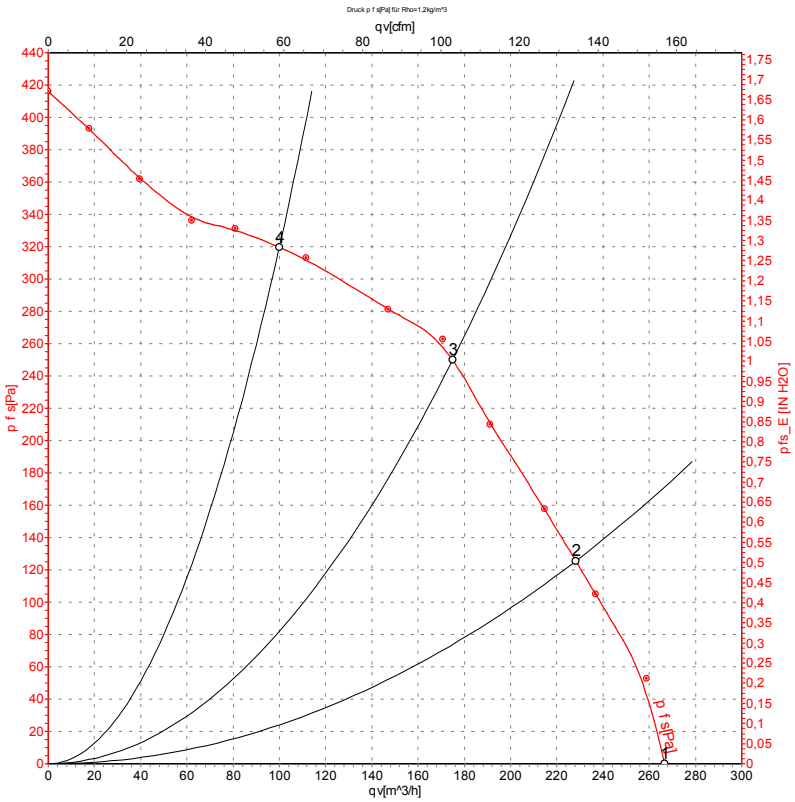

Measurement: LU-57079-1

Air performance measured according to ISO 5801 installation category A. For detailed information on the measurement setup, contact ebm-papst. Intake sound level: Sound power level according to ISO 13347 / sound pressure level measured at 1 m distance from fan axis. The values given are valid under the specified measuring conditions and may vary due to conditions of installation. For deviations from the standard configuration, the parameters have to be checked on the installed unit.

Measured values

	U	f	n	P_e	I	q_V	p_{fs}	q_V	p_{fs}
	V	Hz	min^{-1}	W	A	m^3/h	Pa	cfm	in. wg
1	230	60	2050	100	0.45	265	0	155	0.00
2	230	60	2405	99	0.43	230	125	135	0.50
3	230	60	2710	94	0.41	175	250	105	1.00
4	230	60	3030	87	0.38	100	320	60	1.28

U = Power supply · f = Frequency · n = Speed (rpm) · P_e = Power consumption · I = Current draw · q_V = Air flow · p_{fs} = Pressure increase

ebm-papst Mulfingen GmbH & Co. KG · Bachmühle 2 · D-74673 Mulfingen · Phone +49 (0) 7938 81-0 · Fax +49 (0) 7938 81-110 · info1@de.ebmpapst.com · www.ebmpapst.com