G1G160-BH29-52

EC centrifugal fan

forward-curved, single-intake

with housing (flange)

ebm-papst Mulfingen GmbH & Co. KG
Bachmühle 2 · D-74673 Mulfingen
Phone +49 7938 81-0
Fax +49 7938 81-110
info1@de.ebmpapst.com
www.ebmpapst.com

Limited partnership · Headquarters Mulfingen
Amtsgericht (court of registration) Stuttgart · HRA 590344

General partner Elektrobau Mulfingen GmbH · Headquarters Mulfingen
Amtsgericht (court of registration) Stuttgart · HRB 590142

Nominal data

Type	**G1G160-BH29-52**
Motor	**M1G074-BF**

Nominal voltage	VDC	24
Nominal voltage range	VDC	16 .. 28

Method of obtaining data		fa
Speed (rpm)	min^{-1}	1750
Power consumption	W	105
Current draw	A	5.8
Min. ambient temperature	°C	-25
Max. ambient temperature	°C	60

ml = Max. load · me = Max. efficiency · fa = Free air · cs = Customer specification · ce = Customer equipment
Subject to change

EC centrifugal fan

forward-curved, single-intake
with housing (flange)

Technical description

Weight	2.87 kg
Size	160 mm
Motor size	74
Rotor surface	Painted black
Impeller material	Sheet steel, galvanized
Direction of rotation	Clockwise, viewed toward rotor
Degree of protection	IP42
Insulation class	"B"
Moisture (F) / Environmental (H) protection class	H0+
Max. permitted ambient temp. for motor (transport/storage)	+80 °C
Min. permitted ambient temp. for motor (transport/storage)	-40 °C
Installation position	Any
Condensation drainage holes	None
Mode	S1
Motor bearing	Ball bearing
Technical features	- Tach output - Motor current limitation - Soft start - Control input 0-10 VDC / PWM - Reverse polarity protection
EMC immunity to interference	According to EN 61000-6-2 (industrial environment)
EMC interference emission	According to EN 55022 (Class B)
With cable	Axial
Protection class assignment	III; Requires supply with safety extra-low voltage SELV. This component to be built-in can have several local protection classes. This specification relates to the basic design of this component. The final protection class is based on the intended installation and connection of the components.
Conformity with standards	EN 62368-1
Approval	EAC; UL 1004-1; CSA C22.2 No. 77

ebm-papst Mulfingen GmbH & Co. KG · Bachmühle 2 · D-74673 Mulfingen · Phone +49 (0) 7938 81-0 · Fax +49 (0) 7938 81-110 · info1@de.ebmpapst.com · www.ebmpapst.com

EC centrifugal fan

forward-curved, single-intake

with housing (flange)

Product drawing

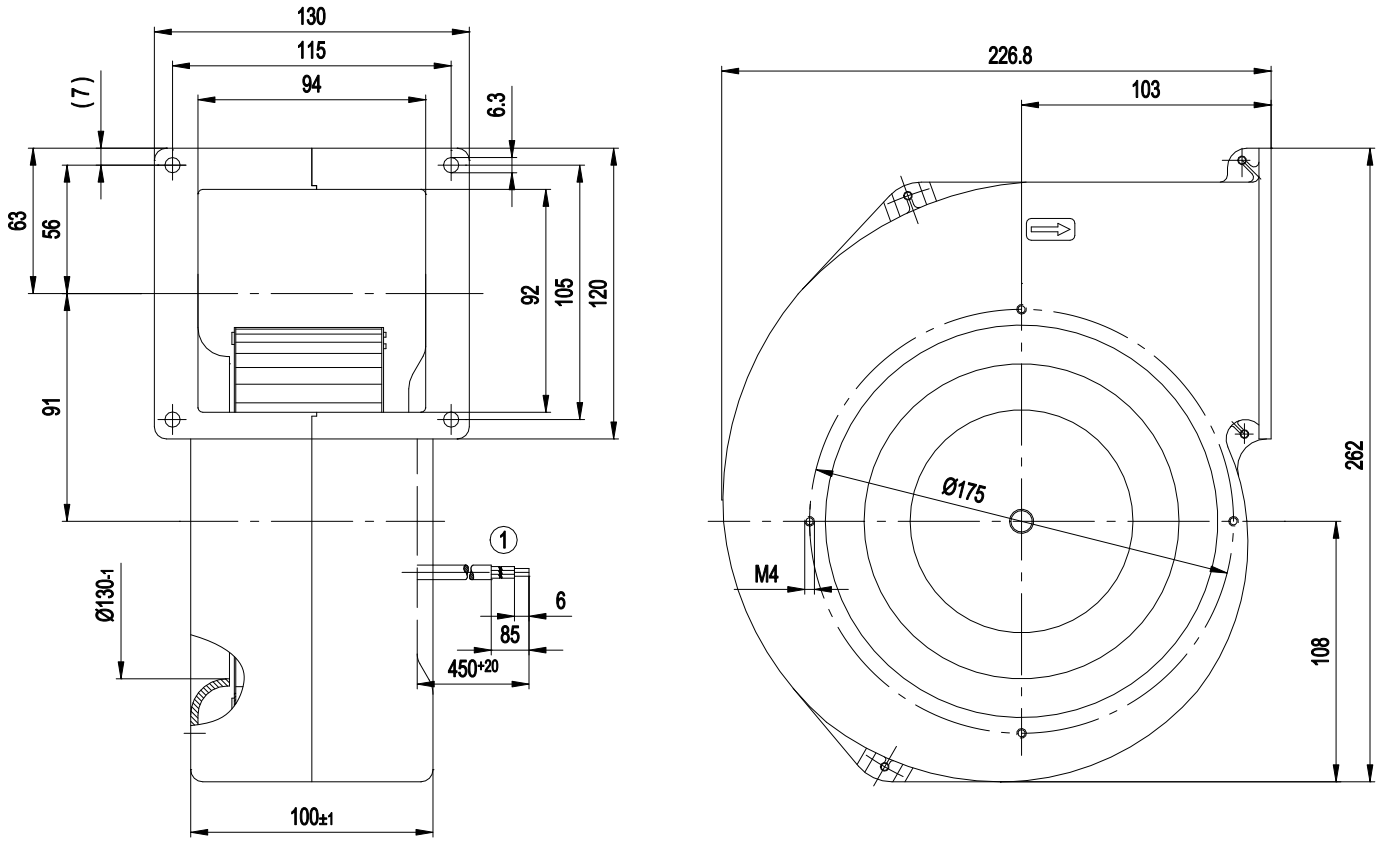

1	Cable AWG 20, 4x crimped splices

ebm-papst Mulfingen GmbH & Co. KG · Bachmühle 2 · D-74673 Mulfingen · Phone +49 (0) 7938 81-0 · Fax +49 (0) 7938 81-110 · info1@de.ebmpapst.com · www.ebmpapst.com

EC centrifugal fan

forward-curved, single-intake

with housing (flange)

Connection diagram

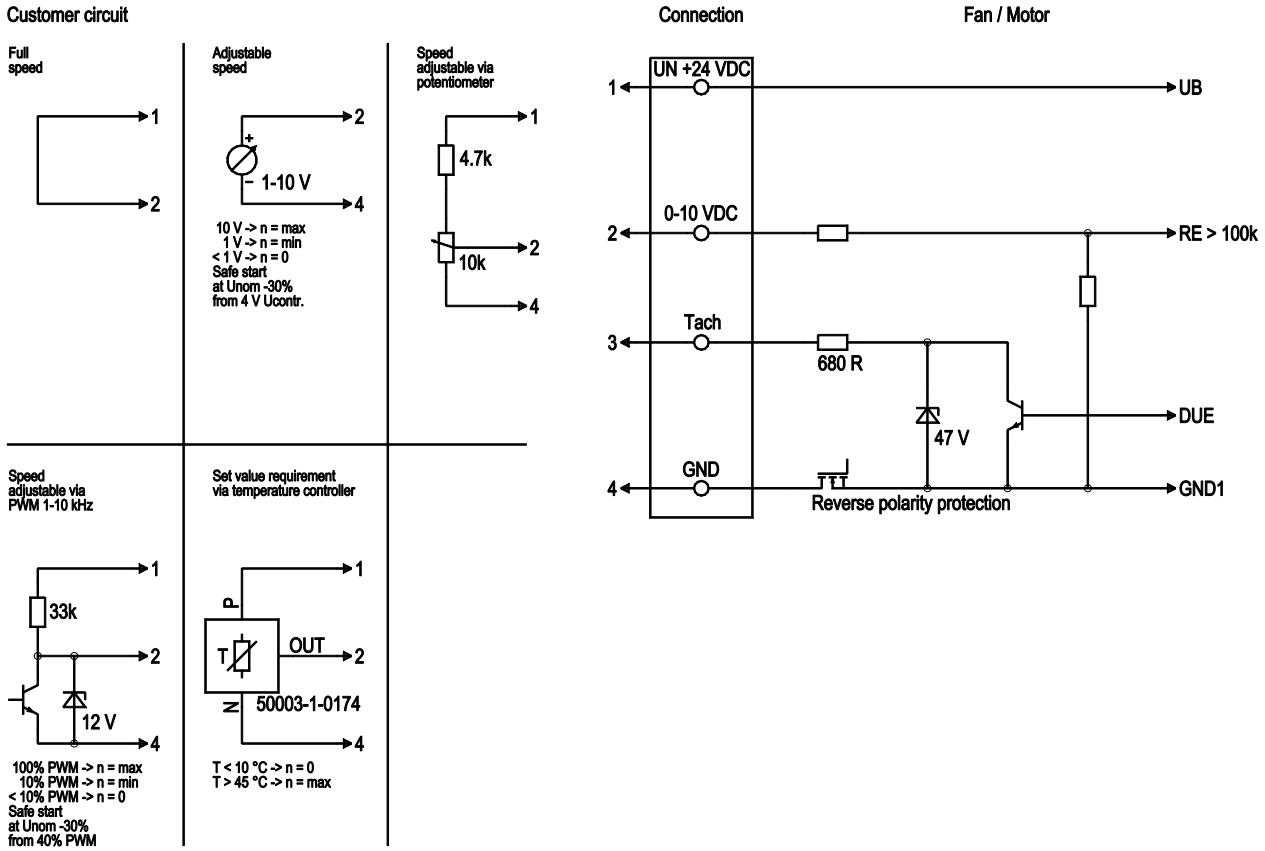

No.	Conn.	Designation	Color	Function/assignment
1	1	Un +24 VDC	red	Power supply 24 VDC, maximum ripple 3.5 %
1	2	0-10 VDC	yellow	Control input Re > 100k
1	3	Tach	white	Tach output, 3 pulses per revolution, Isink max = 10 mA
1	4	GND	blue	Reference ground

ebm-papst Mulfingen GmbH & Co. KG · Bachmühle 2 · D-74673 Mulfingen · Phone +49 (0) 7938 81-0 · Fax +49 (0) 7938 81-110 · info1@de.ebmpapst.com · www.ebmpapst.com

EC centrifugal fan

forward-curved, single-intake

with housing (flange)

Curves: Air performance

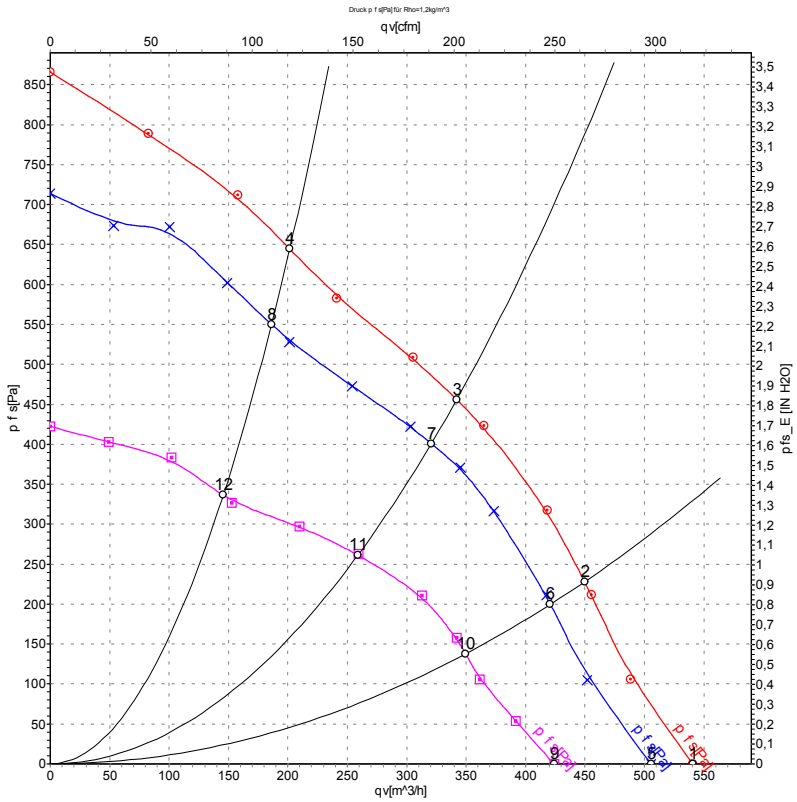

Measurement: LU-59980-1
Measurement: LU-59979-1
Measurement: LU-59981-1

Air performance measured according to ISO 5801 installation category A. For detailed information on the measurement setup, contact ebm-papst. Intake sound level: Sound power level according to ISO 13347 / sound pressure level measured at 1 m distance from fan axis. The values given are valid under the specified measuring conditions and may vary due to conditions of installation. For deviations from the standard configuration, the parameters have to be checked on the installed unit.

Measured values

	U	n	P_{ed}	I	q_V	p_{fs}	q_V	p_{fs}
	V	min^{-1}	W	A	m^3/h	Pa	cfm	in. wg
1	28	1870	134	6.43	540	0	320	0.00
2	28	2115	121	5.54	450	229	265	0.92
3	28	2420	110	4.82	340	456	200	1.83
4	28	2825	102	4.20	200	645	120	2.59
5	24	1750	105	5.80	505	0	300	0.00
6	24	1990	99	5.02	420	200	250	0.80
7	24	2275	91	4.43	320	400	190	1.61
8	24	2655	83	3.86	185	550	110	2.21
9	16	1485	63	4.48	425	0	250	0.00
10	16	1670	57	4.01	350	138	205	0.55
11	16	1860	49	3.42	260	263	150	1.06
12	16	2085	41	2.85	145	334	85	1.34

U = Voltage · n = Speed (rpm) · P_{ed} = Power consumption · I = Current draw · q_V = Air flow · p_{fs} = Pressure increase

ebm-papst Mulfingen GmbH & Co. KG · Bachmühle 2 · D-74673 Mulfingen · Phone +49 (0) 7938 81-0 · Fax +49 (0) 7938 81-110 · info1@de.ebmpapst.com · www.ebmpapst.com