S4D400-AP12-50

AC axial panel fan

sickle-shaped blades (S series)

with guard grille for short nozzle



ebm-papst Mulfingen GmbH & Co. KG
Bachmühle 2 · D-74673 Mulfingen
Phone +49 7938 81-0
Fax +49 7938 81-110
info1@de.ebmpapst.com
www.ebmpapst.com

Limited partnership · Headquarters Mulfingen
Amtsgericht (court of registration) Stuttgart · HRA 590344

General partner Elektrobau Mulfingen GmbH · Headquarters Mulfingen
Amtsgericht (court of registration) Stuttgart · HRB 590142

Nominal data

Type	**S4D400-AP12-50**
Motor	**M4D074-EI**

Phase		3~	3~	3~	3~
Nominal voltage	VAC	230	230	400	400
Wiring		Δ	Δ	Y	Y
Frequency	Hz	50	60	50	60
Method of obtaining data		fa	fa	fa	fa
Valid for approval/standard		CE	CE	CE	CE
Speed (rpm)	min^{-1}	1450	1690	1450	1690
Power consumption	W	135	185	135	185
Current draw	A	0.76	0.68	0.44	0.39
Max. back pressure	Pa	105	120	105	120
Max. back pressure	in. wg	0.42	0.48	0.42	0.48
Min. ambient temperature	°C	-25	-25	-25	-25
Max. ambient temperature	°C	40	40	40	40
Starting current	A	3.0	3.0	1.7	1.7

ml = Max. load · me = Max. efficiency · fa = Free air · cs = Customer specification · ce = Customer equipment
Subject to change

Data according to Commission Regulation (EU) 327/2011 (prEN 17166)

		Actual	Req. 2015
01 Overall efficiency η_{es}	%	30.7	29.3
02 Measurement category		A	
03 Efficiency category		Static	
04 Efficiency grade N		41.4	40
05 Variable speed drive		No	

09 Power consumption P_e	kW	0.2
09 Air flow q_v	m^3/h	2830
09 Pressure increase p_{fs}	Pa	81
10 Speed (rpm) n	min^{-1}	1390
11 Specific ratio*		1.00

Data obtained at optimum efficiency level.

* Specific ratio = 1 + p_{fs} / 100 000 Pa

LU-192397

The efficiency values displayed for achieving conformity with the Ecodesign Regulation EU 327/2011 has been reached with defined air duct components (e.g. inlet rings).
The dimensions must be requested from ebm-papst. If other air conduction geometries are used on the installation side, the ebm-papst evaluation loses its validity/the conformity must be confirmed again.

The product does not fall within the scope of Regulation (EU) 2019/1781 due to the exception specified in Article 2 (2a) (motors completely integrated into a product).

AC axial panel fan

sickle-shaped blades (S series)

with guard grille for short nozzle

Technical description

Weight	5.5 kg
Size	400 mm
Motor size	74
Rotor surface	Painted black
Terminal box material	PP plastic
Blade material	Sheet steel, painted black
Guard grille material	Steel, coated with black plastic (RAL 9005)
Number of blades	5
Airflow direction	V
Direction of rotation	Counterclockwise, viewed toward rotor
Degree of protection	IP44; installation- and position-dependent as per EN 60034-5
Insulation class	"B"
Moisture (F) / Environmental (H) protection class	H1
Max. permitted ambient temp. for motor (transport/storage)	+ 80 °C
Min. permitted ambient temp. for motor (transport/storage)	- 40 °C
Installation position	Shaft horizontal or rotor on bottom; rotor on top on request
Condensation drainage holes	On rotor side
Mode	S1
Motor bearing	Ball bearing
Touch current according to IEC 60990 (measuring circuit Fig. 4, TN system)	< 0.75 mA
Electrical hookup	Terminal box
With cable	Variable
Protection class assignment	I; If a protective earth is connected to the PE connection point. The built-in component has several local protection class assignments. The final protection class is determined by the intended installation.
Conformity with standards	EN 60335-1, motor does not have factory-installed overheating protection; CE
Approval	CCC

ebm-papst Mulfingen GmbH & Co. KG · Bachmühle 2 · D-74673 Mulfingen · Phone +49 (0) 7938 81-0 · Fax +49 (0) 7938 81-110 · info1@de.ebmpapst.com · www.ebmpapst.com

AC axial panel fan

sickle-shaped blades (S series)

with guard grille for short nozzle

Product drawing

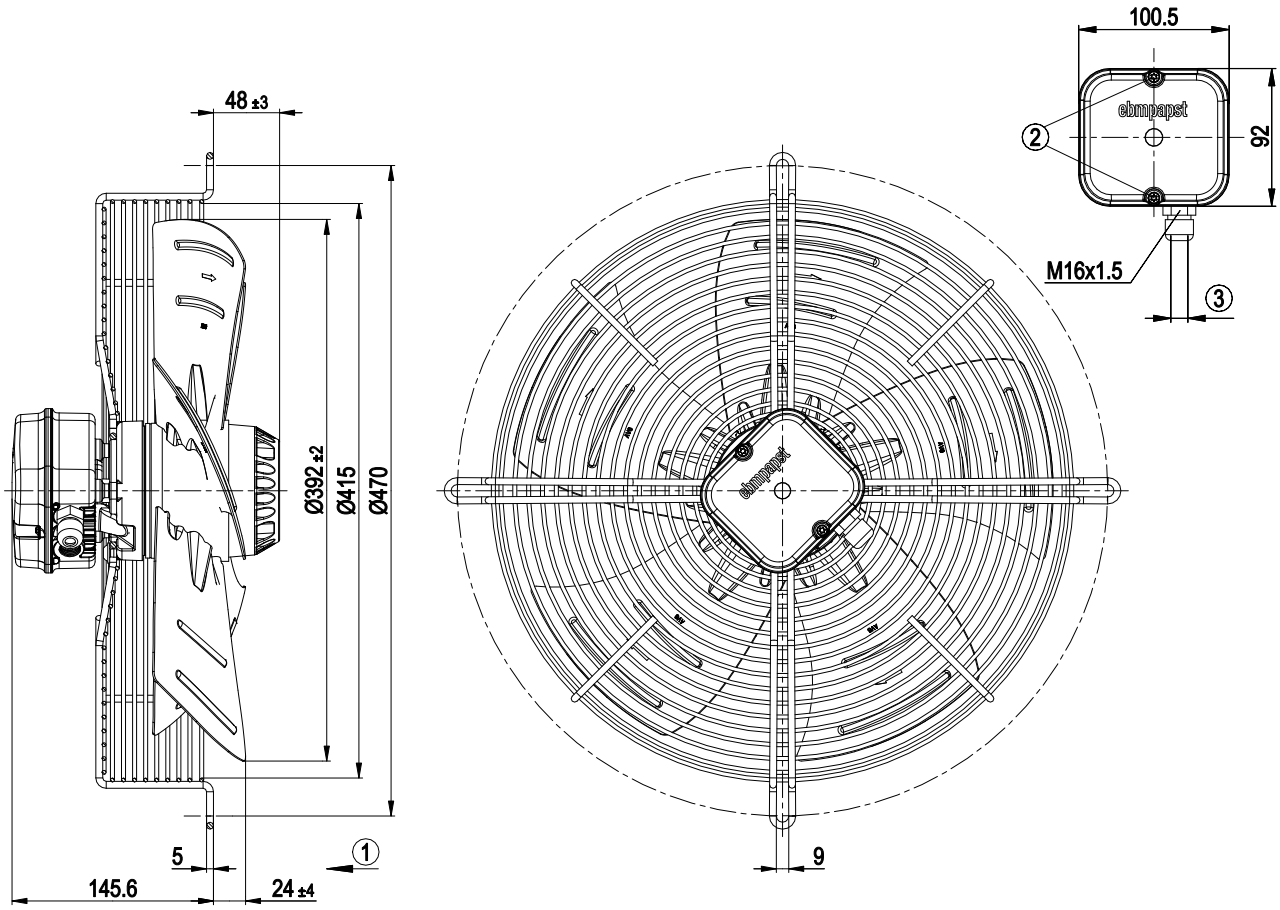

1	Direction of air flow "V"
2	Tightening torque 0.5 ± 0.1 Nm
3	Cable diameter max. 7.5 mm, tightening torque 1.3 ± 0.2 Nm

ebm-papst Mulfingen GmbH & Co. KG · Bachmühle 2 · D-74673 Mulfingen · Phone +49 (0) 7938 81-0 · Fax +49 (0) 7938 81-110 · info1@de.ebmpapst.com · www.ebmpapst.com

AC axial panel fan

sickle-shaped blades (S series)

with guard grille for short nozzle

Connection diagram

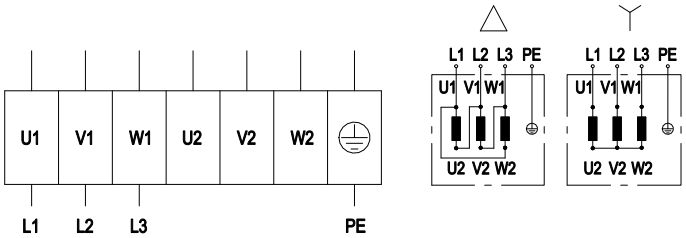

	Three-phase motor	Y	Star connection	Δ	Delta connection
L1	= U1 = black	L2	= V1 = blue	L3	= W1 = brown
U2	green	V2	white	W2	yellow
PE	PE (green/yellow)				

ebm-papst Mulfingen GmbH & Co. KG · Bachmühle 2 · D-74673 Mulfingen · Phone +49 (0) 7938 81-0 · Fax +49 (0) 7938 81-110 · info1@de.ebmpapst.com · www.ebmpapst.com

AC axial panel fan

sickle-shaped blades (S series)

with guard grille for short nozzle

Curves: Air performance 50 Hz

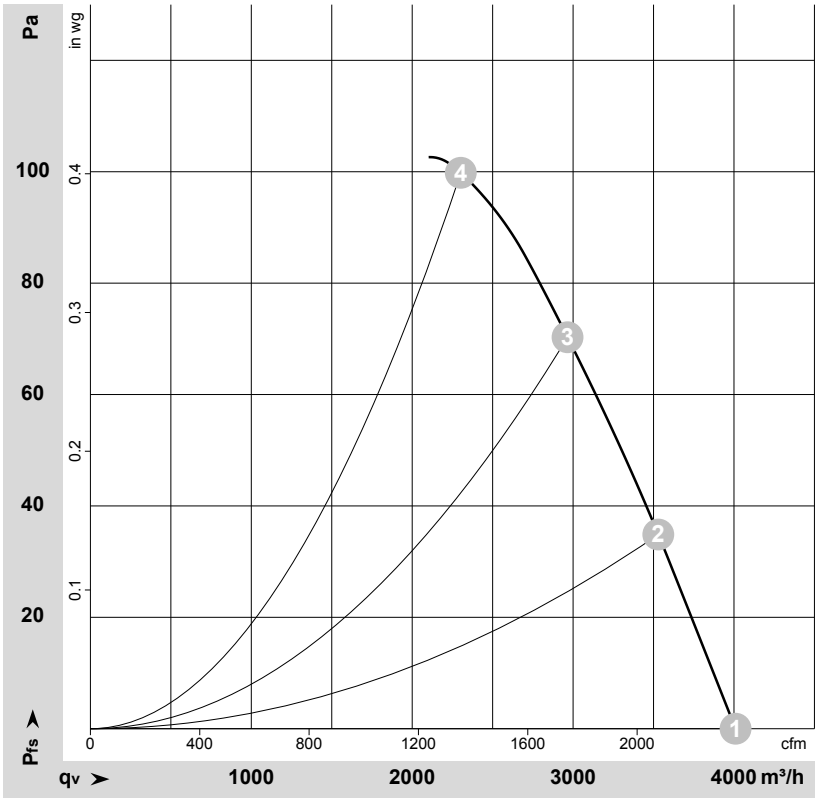

ρ = 1.15 kg/m³ ± 2 %

Measurement: LU-27622-1
Date: 1995-12-06
Housing: 18661-2-4037

Air performance measured according to ISO 5801 installation category A. For detailed information on the measurement setup, contact ebm-papst. Intake sound level: Sound power level according to ISO 13347 / sound pressure level measured at 1 m distance from fan axis. The values given are valid under the specified measuring conditions and may vary due to conditions of installation. For deviations from the standard configuration, the parameters have to be checked on the installed unit.

Measured values

	Wired	U	f	n	P_e	I	q_V	p_{fs}	q_V	p_{fs}
		V	Hz	min^{-1}	W	A	m^3/h	Pa	cfm	in. wg
1	Y	400	50	1450	135	0.44	4010	0	2360	0.00
2	Y	400	50	1435	161	0.47	3530	35	2080	0.14
3	Y	400	50	1420	183	0.49	2965	70	1745	0.28
4	Y	400	50	1410	204	0.50	2300	100	1355	0.40

Wired = Wiring · U = Voltage · f = Frequency · n = Speed (rpm) · P_e = Power consumption · I = Current draw · q_V = Air flow · p_{fs} = Pressure increase

ebm-papst Mulfingen GmbH & Co. KG · Bachmühle 2 · D-74673 Mulfingen · Phone +49 (0) 7938 81-0 · Fax +49 (0) 7938 81-110 · info1@de.ebmpapst.com · www.ebmpapst.com

AC axial panel fan

sickle-shaped blades (S series)

with guard grille for short nozzle

Curves: Air performance 60 Hz

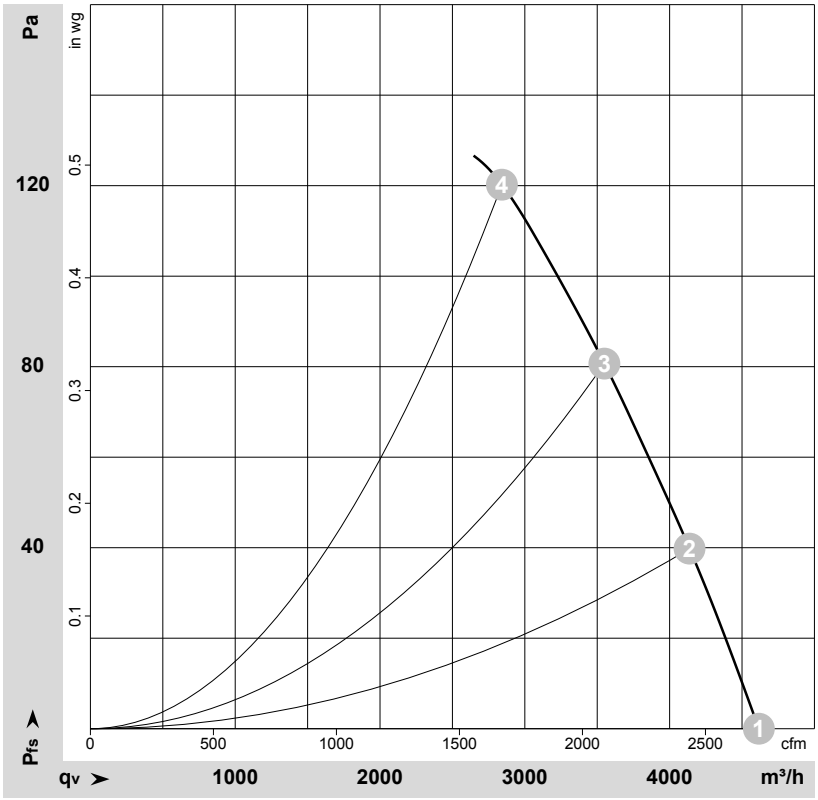

ρ = 1.15 kg/m³ ± 2 %

Measurement: LU-27623-1
Date: 1995-12-06
Housing: 18661-2-4037

Air performance measured according to ISO 5801 installation category A. For detailed information on the measurement setup, contact ebm-papst. Intake sound level: Sound power level according to ISO 13347 / sound pressure level measured at 1 m distance from fan axis. The values given are valid under the specified measuring conditions and may vary due to conditions of installation. For deviations from the standard configuration, the parameters have to be checked on the installed unit.

Measured values

	Wired	U	f	n	P_e	I	q_V	p_{fs}	q_V	p_{fs}
		V	Hz	min^{-1}	W	A	m^3/h	Pa	cfm	in. wg
1	Y	400	60	1690	185	0.39	4615	0	2715	0.00
2	Y	400	60	1660	223	0.45	4140	40	2435	0.16
3	Y	400	60	1635	257	0.49	3550	80	2090	0.32
4	Y	400	60	1605	292	0.54	2840	120	1675	0.48

Wired = Wiring · U = Voltage · f = Frequency · n = Speed (rpm) · P_e = Power consumption · I = Current draw · q_V = Air flow · p_{fs} = Pressure increase

ebm-papst Mulfingen GmbH & Co. KG · Bachmühle 2 · D-74673 Mulfingen · Phone +49 (0) 7938 81-0 · Fax +49 (0) 7938 81-110 · info1@de.ebmpapst.com · www.ebmpapst.com