S1G300-CA19-02

EC axial panel fan - ESM

sickle-shaped blades (S series)

ESM guard grille



ebm-papst Mulfingen GmbH & Co. KG
Bachmühle 2 · D-74673 Mulfingen
Phone +49 7938 81-0
Fax +49 7938 81-110
info1@de.ebmpapst.com
www.ebmpapst.com

Limited partnership · Headquarters Mulfingen
Amtsgericht (court of registration) Stuttgart · HRA 590344

General partner Elektrobau Mulfingen GmbH · Headquarters Mulfingen
Amtsgericht (court of registration) Stuttgart · HRB 590142

Nominal data

Type	**S1G300-CA19-02**		
Motor	**M1G055-BI**		
Phase		1~	1~
Nominal voltage	VAC	230	230
Frequency	Hz	50/60	50/60
Method of obtaining data		ml/ce	
Speed (rpm)	min^{-1}	1250	900
Power consumption	W	35	
Current draw	A	0.27	
Max. back pressure	Pa	35	
Max. back pressure	in. wg	0.14	
Min. ambient temperature	°C	-30	-30
Max. ambient temperature	°C	50	50

ml = Max. load · me = Max. efficiency · fa = Free air · cs = Customer specification · ce = Customer equipment
Subject to change

EC axial panel fan - ESM

sickle-shaped blades (S series)

ESM guard grille

Technical description

Weight	1.4 kg
Size	300 mm
Motor size	55
Blade material	PA plastic
Guard grille material	PP plastic
Number of blades	5
Airflow direction	A
Direction of rotation	Counterclockwise, viewed toward rotor
Degree of protection	IP55
Insulation class	"B"
Moisture (F) / Environmental (H) protection class	H1+
Max. permitted ambient temp. for motor (transport/storage)	+80 °C
Min. permitted ambient temp. for motor (transport/storage)	-40 °C
Installation position	Any
Condensation drainage holes	None
Mode	S1
Motor bearing	Ball bearing
Technical features	- Speed setting input (230 V) - ESM+ expandable with plug-in module - Soft start - Thermal overload protection for motor
Speed levels	2
EMC immunity to interference	According to EN 61000-6-2 (industrial environment)
EMC circuit feedback	According to EN 61000-3-2/3
EMC interference emission	According to EN 61000-6-3 (household environment)
Touch current according to IEC 60990 (measuring circuit Fig. 4, TN system)	<= 0.25 mA
Motor protection	Thermal switch auto reset, internally connected
With cable	Lateral
Protection class assignment	II; The built-in component has several local protection class assignments. The final protection class is determined by the intended installation.
Safety class of the permissible refrigerants according to EN378 / ISO5149-1	A3/B3
Maximum surface temperature	225 °C
Conformity with standards	EN 60034-1; EN 60204-1; EN 60335-1; EN 60335-2-24; EN 60335-2-80; EN 60335-2-89; UKCA; CE
Comment on CE	Ecodesign Directive 2009/125/EC + Fan Directive (EC) No. 327/2011 does not apply, as power consumption <125W.
Approval	CCC; UL 1004-3; EAC; CSA C22.2 No. 77; VDE

ebm-papst Mulfingen GmbH & Co. KG · Bachmühle 2 · D-74673 Mulfingen · Phone +49 (0) 7938 81-0 · Fax +49 (0) 7938 81-110 · info1@de.ebmpapst.com · www.ebmpapst.com

EC axial panel fan - ESM

sickle-shaped blades (S series)

ESM guard grille

Product drawing

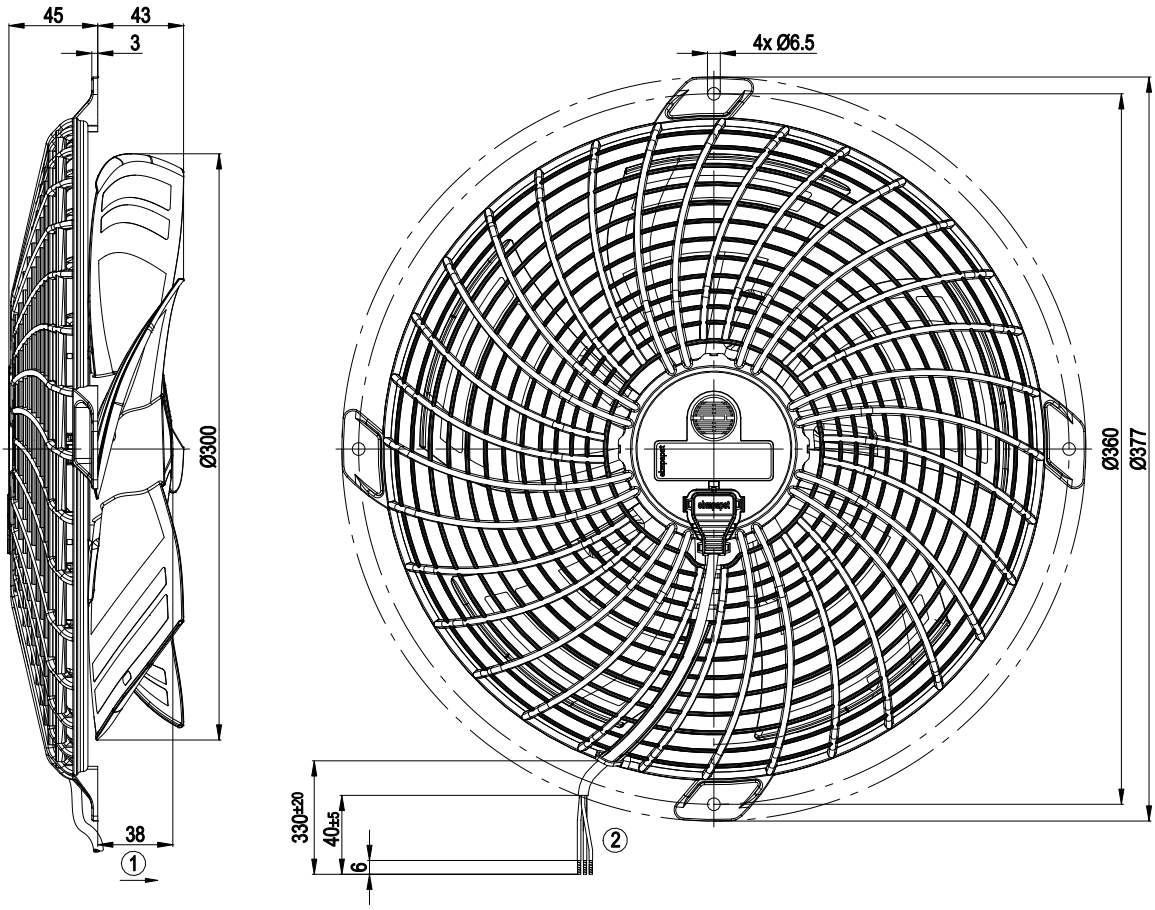

1	Direction of air flow "A"
2	Cable AWG20; 3x crimped splices

Connection diagram

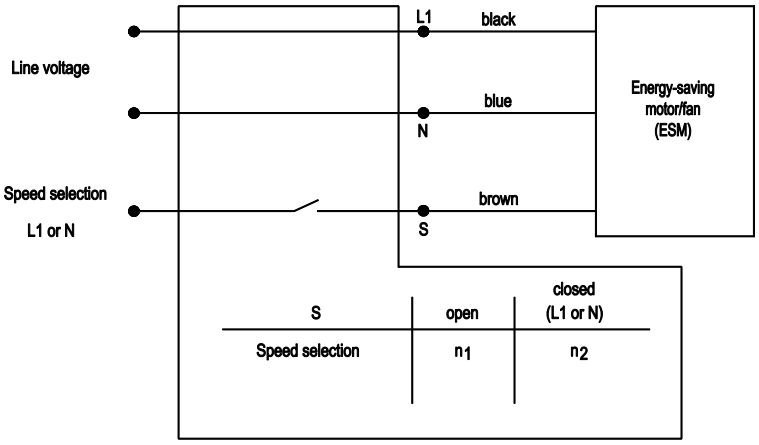

ebm-papst Mulfingen GmbH & Co. KG · Bachmühle 2 · D-74673 Mulfingen · Phone +49 (0) 7938 81-0 · Fax +49 (0) 7938 81-110 · info1@de.ebmpapst.com · www.ebmpapst.com

EC axial panel fan - ESM

sickle-shaped blades (S series)

ESM guard grille

Curves: Air performance 50 Hz

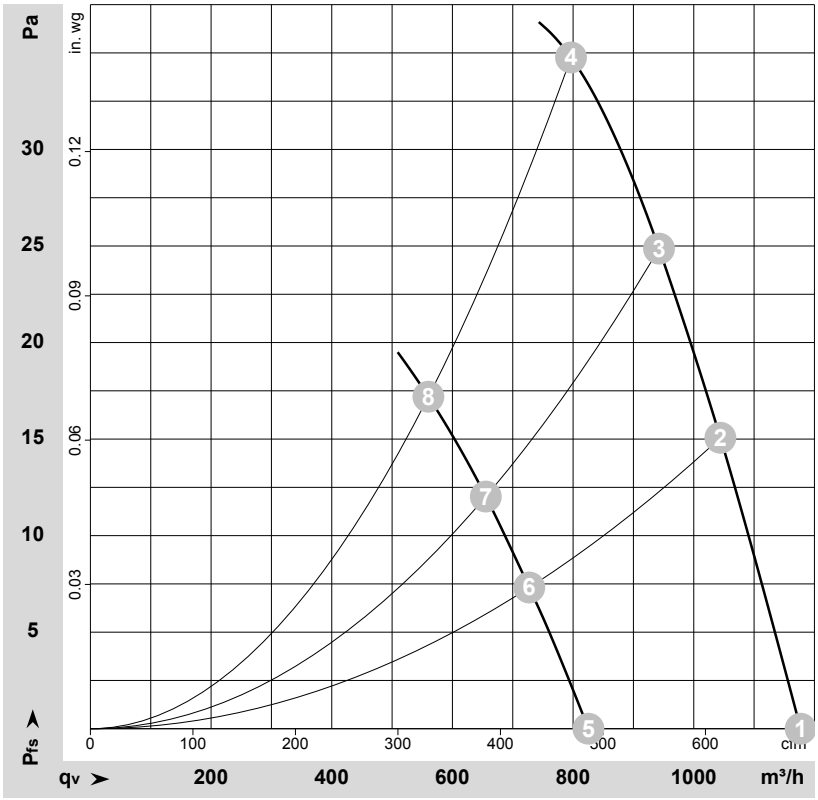

ρ = 1.15 kg/m³ ± 2 %

Measurement: LU-186011-1
Date: 2017-04-26

Measurement: LU-186098-1
Date: 2017-05-03

Air performance measured according to ISO 5801 installation category A. For detailed information on the measurement setup, contact ebm-papst. Intake sound level: Sound power level according to ISO 13347 / sound pressure level measured at 1 m distance from fan axis. The values given are valid under the specified measuring conditions and may vary due to conditions of installation. For deviations from the standard configuration, the parameters have to be checked on the installed unit.

Measured values

	Stage	Wired	U	f	n	P_{ed}	I	LpA_{in}	LwA_{in}	q_V	p_{fs}	q_V	p_{fs}
			V	Hz	min^{-1}	W	A	dB(A)	dB(A)	m^3/h	Pa	cfm	in. wg
1	2	1~	230	50	1250	27	0.23	56	65	1175	0	695	0.00
2	2	1~	230	50	1250	31	0.26	55	64	1045	15	615	0.06
3	2	1~	230	50	1250	33	0.27	56	64	940	25	555	0.10
4	2	1~	230	50	1250	35	0.27	57	65	795	35	470	0.14
5	1	1~	230	50	900	13	0.13	47	56	825	0	485	0.00
6	1	1~	230	50	900	14	0.15	46	55	725	7	430	0.03
7	1	1~	230	50	900	15	0.15	45	55	655	12	385	0.05
8	1	1~	230	50	900	18	0.17	45	54	560	17	330	0.07

Wired = Wiring · U = Voltage · f = Frequency · n = Speed (rpm) · P_{ed} = Power consumption · I = Current draw · LpA_{in} = Sound pressure level intake side · LwA_{in} = Sound power level intake side
q_V = Air flow · p_{fs} = Pressure increase

ebm-papst Mulfingen GmbH & Co. KG · Bachmühle 2 · D-74673 Mulfingen · Phone +49 (0) 7938 81-0 · Fax +49 (0) 7938 81-110 · info1@de.ebmpapst.com · www.ebmpapst.com