W3G560-GH99-01

EC axial fan - HyBlade

sickle-shaped blades (S series)

with square full nozzle

ebm-papst Mulfingen GmbH & Co. KG
Bachmühle 2 · D-74673 Mulfingen
Phone +49 7938 81-0
Fax +49 7938 81-110
info1@de.ebmpapst.com
www.ebmpapst.com

Limited partnership · Headquarters Mulfingen
Amtsgericht (court of registration) Stuttgart · HRA 590344

General partner Elektrobau Mulfingen GmbH · Headquarters Mulfingen
Amtsgericht (court of registration) Stuttgart · HRB 590142

Nominal data

Type	**W3G560-GH99-01**
Motor	**M3G112-IA**

Phase		3~
Nominal voltage	VAC	400
Nominal voltage range	VAC	380 .. 480
Frequency	Hz	50/60
Method of obtaining data		ml
Speed (rpm)	min^{-1}	1520
Power consumption	W	1300
Current draw	A	2.1
Max. back pressure	Pa	200
Max. back pressure	in. wg	0.8
Min. ambient temperature	°C	-25
Max. ambient temperature	°C	60

ml = Max. load · me = Max. efficiency · fa = Free air · cs = Customer specification · ce = Customer equipment
Subject to change

Data according to Commission Regulation (EU) 327/2011 (prEN 17166)

		Actual	Req. 2015
01 Overall efficiency η_{es}	%	45.5	34.4
02 Measurement category		A	
03 Efficiency category		Static	
04 Efficiency grade N		51.1	40
05 Variable speed drive		Yes	

09 Power consumption P_{ed}	kW	1.3
09 Air flow q_v	m^3/h	7925
09 Pressure increase p_{fs}	Pa	260
10 Speed (rpm) n	min^{-1}	1500
11 Specific ratio*		1.00

Data obtained at optimum efficiency level.

* Specific ratio = 1 + p_{fs} / 100 000 Pa

LU-183654

The efficiency values displayed for achieving conformity with the Ecodesign Regulation EU 327/2011 has been reached with defined air duct components (e.g. inlet rings).
The dimensions must be requested from ebm-papst. If other air conduction geometries are used on the installation side, the ebm-papst evaluation loses its validity/the conformity must be confirmed again.

The product does not fall within the scope of Regulation (EU) 2019/1781 due to the exception specified in Article 2 (2a) (motors completely integrated into a product).

EC axial fan - HyBlade

sickle-shaped blades (S series)

with square full nozzle

Technical description

Weight	22.8 kg
Size	560 mm
Motor size	112
Rotor surface	Painted black
Terminal box material	PP plastic
Electronics housing material	Die-cast aluminum, painted black
Blade material	Sheet aluminum insert, sprayed with PP plastic
Fan housing material	Sheet steel, galvanized and coated with black plastic (RAL 9005)
Guard grille material	Steel, coated with black plastic (RAL 9005)
Number of blades	5
Blade pitch	-5°
Airflow direction	V
Direction of rotation	Counterclockwise, viewed toward rotor
Degree of protection	IP55
Insulation class	"F"
Moisture (F) / Environmental (H) protection class	H2
Ambient temperature note	Occasional start-up between -40°C and -25°C is permissible. For continuous operation at temperatures below -25°C (e.g. refrigeration applications) we recommend our fan design with special low-temperature bearings.
Max. permitted ambient temp. for motor (transport/storage)	+80 °C
Min. permitted ambient temp. for motor (transport/storage)	-40 °C
Installation position	Shaft horizontal or rotor on bottom; rotor on top on request
Condensation drainage holes	On rotor side
Mode	S1
Motor bearing	Ball bearing; (sealed)
Technical features	- Output 10 VDC, max. 10 mA - Operation and alarm display - External 24 V input (parameter setting) - Alarm relay - Integrated PID controller - Power limiter - Motor current limitation - PFC, passive - RS-485 MODBUS-RTU - Soft start - EEPROM write cycles: 100,000 maximum - Control input 0-10 VDC / PWM - Control interface with SELV potential safely disconnected from supply - Temperature derating - Thermal overload protection for electronics/motor - Line undervoltage / phase failure detection
EMC immunity to interference	According to EN 61000-6-2 (industrial environment)
EMC interference emission	According to EN 61000-6-3 (household environment), except EN 61000-3-2 for professionally used equipment with a total rated power greater than 1 kW

ebm-papst Mulfingen GmbH & Co. KG · Bachmühle 2 · D-74673 Mulfingen · Phone +49 (0) 7938 81-0 · Fax +49 (0) 7938 81-110 · info1@de.ebmpapst.com · www.ebmpapst.com

EC axial fan - HyBlade

sickle-shaped blades (S series)

with square full nozzle

Touch current according to IEC 60990 (measuring circuit Fig. 4, TN system)	<= 3.5 mA
Electrical hookup	Terminal box
Motor protection	Thermal overload protector (TOP) internally connected
Protection class	I (with customer connection of protective earth)
Conformity with standards	EN 61800-5-1; CE; UKCA
Approval	CCC; EAC; CSA C22.2 No. 77 + CAN/CSA-E60730-1; UL 1004-7 + 60730-1
Comment	Conformity with EN 60335-1 in preparation

ebm-papst Mulfingen GmbH & Co. KG · Bachmühle 2 · D-74673 Mulfingen · Phone +49 (0) 7938 81-0 · Fax +49 (0) 7938 81-110 · info1@de.ebmpapst.com · www.ebmpapst.com

EC axial fan - HyBlade

sickle-shaped blades (S series)

with square full nozzle

Product drawing

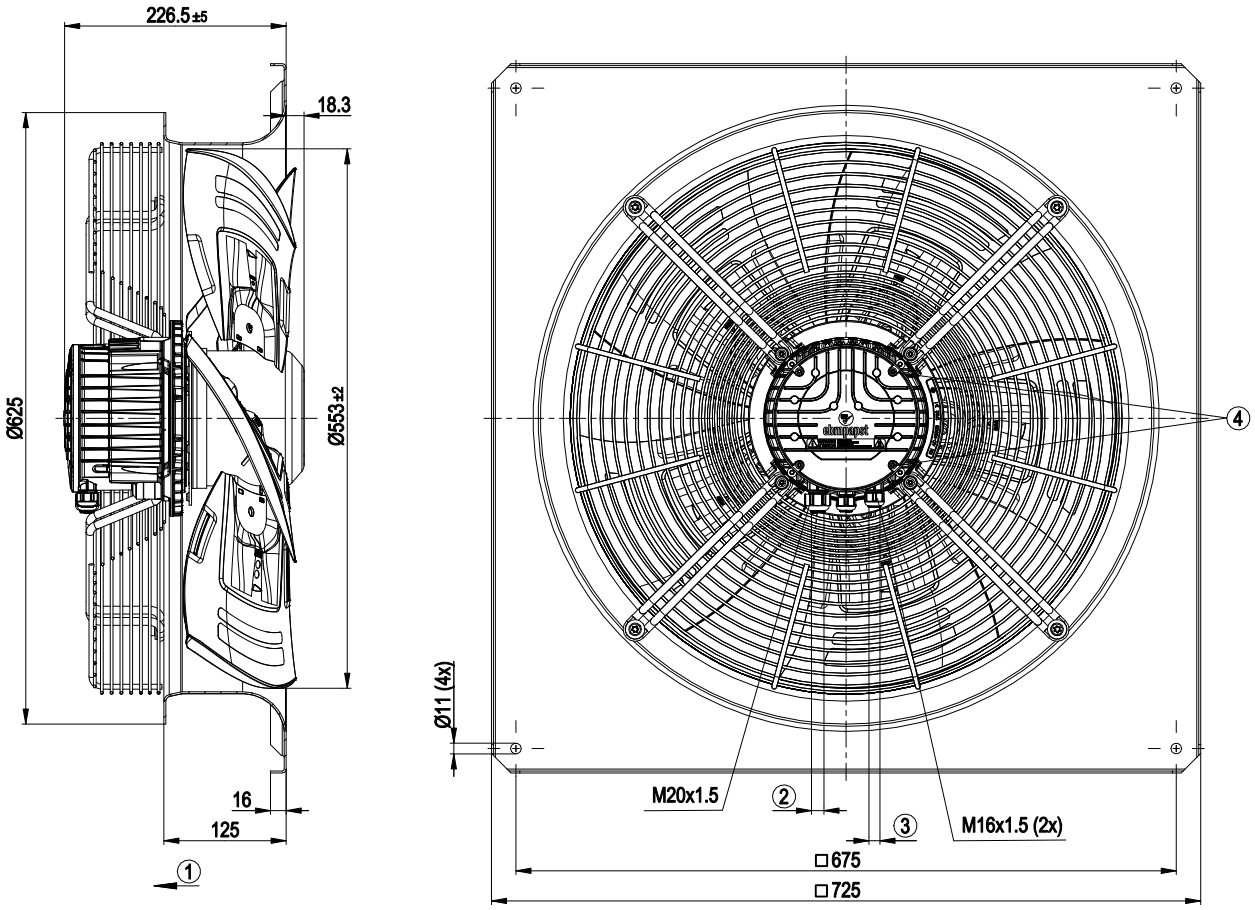

1	Direction of air flow "V"
2	Cable diameter min. 8 mm, max. 12 mm, tightening torque 1.8±0.3 Nm (use must be made of seal provided) Cable diameter min. 4 mm, max. 10 mm, tightening torque 1.8±0.3 Nm
3	Cable diameter min. 6 mm, max. 10 mm, tightening torque 1.8±0.3 Nm (use must be made of seal provided) Cable diameter min. 4 mm, max. 7 mm, tightening torque 1.8±0.3 Nm
4	Tightening torque 1.5 ± 0.2 Nm

ebm-papst Mulfingen GmbH & Co. KG · Bachmühle 2 · D-74673 Mulfingen · Phone +49 (0) 7938 81-0 · Fax +49 (0) 7938 81-110 · info1@de.ebmpapst.com · www.ebmpapst.com

EC axial fan - HyBlade

sickle-shaped blades (S series)

with square full nozzle

Connection diagram

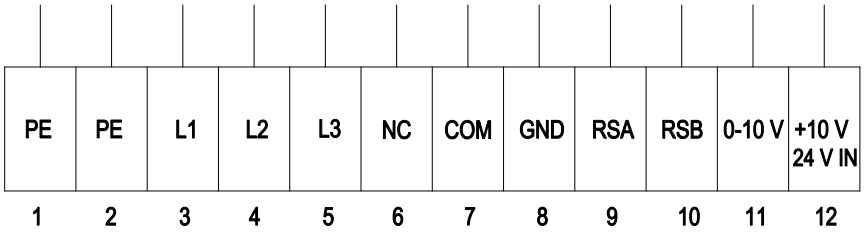

No.	Conn.	Designation	Function/assignment
	1	PE	Protective earth
	2	PE	Protective earth
	3	L1	Power supply
	4	L2	Power supply
	5	L3	Power supply
	6	NC	Status relay, floating status contact, break for failure, contact rating 250 VAC / 2 A (AC1) / min. 10 mA; reinforced insulation on supply side and basic insulation on control interface side
	7	COM	Status relay, floating status contact, break for failure, contact rating 250 VAC / 2 A (AC1) / min. 10 mA; reinforced insulation on supply side and basic insulation on control interface side
	8	GND	Reference ground for control interface, SELV
	9	RSA	RS485 interface for MODBUS, RSA; SELV
	10	RSB	RS485 interface for MODBUS, RSB; SELV
	11	0-10 V	Analog input (set value) SELV, 0-10 V, Ri = 100 kΩ, adjustable curve
	12	+10 V	Fixed voltage output 10 VDC, SELV, +10 V ±3%, max. 10 mA, short-circuit-proof, power supply for external devices (e.g. pot); fixed voltage input 24 VDC for setting parameters via MODBUS without line voltage supply

ebm-papst Mulfingen GmbH & Co. KG · Bachmühle 2 · D-74673 Mulfingen · Phone +49 (0) 7938 81-0 · Fax +49 (0) 7938 81-110 · info1@de.ebmpapst.com · www.ebmpapst.com

EC axial fan - HyBlade

sickle-shaped blades (S series)

with square full nozzle

Curves: Air performance 50 Hz

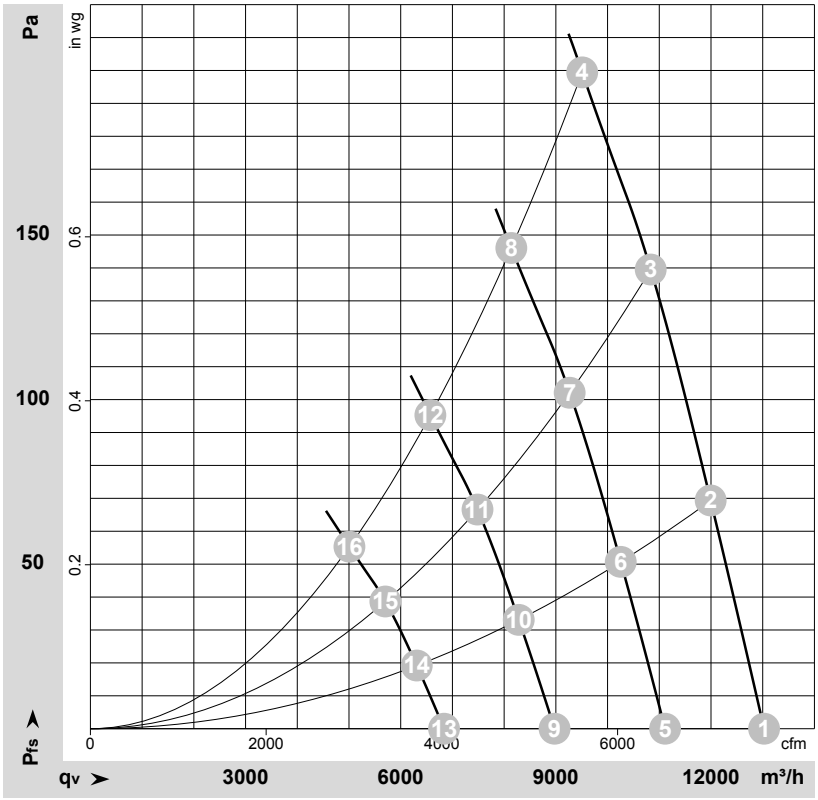

ρ = 1.15 kg/m³ ± 2 %

Measurement: LU-183654-1

Air performance measured according to ISO 5801 installation category A. For detailed information on the measurement setup, contact ebm-papst. Intake sound level: Sound power level according to ISO 13347 / sound pressure level measured at 1 m distance from fan axis. The values given are valid under the specified measuring conditions and may vary due to conditions of installation. For deviations from the standard configuration, the parameters have to be checked on the installed unit.

Measured values

	U	f	n	P_{ed}	I	LpA_{in}	LwA_{in}	LwA_{out}	q_V	p_{fs}	q_V	p_{fs}
	V	Hz	min^{-1}	W	A	dB(A)	dB(A)	dB(A)	m^3/h	Pa	cfm	in. wg
1	400	50	1520	943	1.45	70	77	77	13025	0	7665	0.00
2	400	50	1520	1060	1.63	69	77	76	11995	70	7060	0.28
3	400	50	1520	1178	1.80	70	77	76	10835	140	6375	0.56
4	400	50	1520	1300	2.10	72	79	78	9510	200	5595	0.80
5	400	50	1300	585	0.90	66	73	73	11110	0	6540	0.00
6	400	50	1300	664	1.02	66	73	72	10255	51	6035	0.20
7	400	50	1300	737	1.13	66	73	72	9265	104	5455	0.42
8	400	50	1300	796	1.22	68	75	74	8140	146	4790	0.59
9	400	50	1050	308	0.48	61	68	67	8975	0	5280	0.00
10	400	50	1050	350	0.54	60	68	67	8285	34	4875	0.14
11	400	50	1050	388	0.59	61	68	67	7485	68	4405	0.27
12	400	50	1050	419	0.64	63	69	68	6575	95	3870	0.38
13	400	50	800	136	0.21	54	61	61	6840	0	4025	0.00
14	400	50	800	155	0.24	53	61	60	6310	19	3715	0.08
15	400	50	800	172	0.26	54	61	60	5705	39	3355	0.16
16	400	50	800	185	0.28	56	63	62	5010	55	2950	0.22

U = Voltage · f = Frequency · n = Speed (rpm) · P_{ed} = Power consumption · I = Current draw · LpA_{in} = Sound pressure level intake side · LwA_{in} = Sound power level intake side
LwA_{out} = Sound power level outlet side · q_V = Air flow · p_{fs} = Pressure increase

ebm-papst Mulfingen GmbH & Co. KG · Bachmühle 2 · D-74673 Mulfingen · Phone +49 (0) 7938 81-0 · Fax +49 (0) 7938 81-110 · info1@de.ebmpapst.com · www.ebmpapst.com