Operating instructions

ebm-papst Mulfingen GmbH & Co. KGaA & Co. KG
Bachmühle 2
D-74673 Mulfingen
Phone +49 (0) 7938 81-0
info1@de.ebmpapst.com
www.ebmpapst.com

CONTENTS

1. SAFETY REGULATIONS AND INFORMATION 1
1.1 Hazard levels for warnings 1
1.2 Staff qualifications 1
1.3 Basic safety rules 1
1.4 Voltage 2
1.5 Safety and protective features 2
1.6 Mechanical movement 2
1.7 Emissions 2
1.8 Hot surface 2
1.9 Transport 2
1.10 Storage 2

2. INTENDED USE 3

3. TECHNICAL DATA 4
3.1 Product drawing 4
3.2 Nominal data 5
3.3 Technical description 5
3.4 Mounting data 5
3.5 Transport and storage conditions 5

4. CONNECTION AND STARTUP 6
4.1 Mechanical connection 6
4.2 Electrical connection 6
4.3 Connecting the cables 6
4.4 Connection diagram 7
4.5 Checking connections 8
4.6 Switching on the device 8
4.7 Switching off the device 8

5. MAINTENANCE, MALFUNCTIONS, POSSIBLE CAUSES AND REMEDIES 8
5.1 Cleaning 9
5.2 Safety inspection 9
5.3 Disposal 9

1. SAFETY REGULATIONS AND INFORMATION

Read these operating instructions carefully before starting work on the device. Observe the following warnings to prevent malfunctions or danger to persons.
These operating instructions are to be regarded as part of the device. The device is only to be sold or passed on together with the operating instructions.
These operating instructions may be duplicated and distributed to inform about potential dangers and their prevention.

1.1 Hazard levels for warnings

These operating instructions use the following hazard levels to indicate potentially hazardous situations and important safety regulations:



DANGER
Indicates an imminently hazardous situation which will result in death or serious injury if the specified actions are not taken. Compliance with the instructions is imperative.

WARNING
Indicates a potentially hazardous situation which can result in death or serious injury if the specified actions are not taken. Exercise extreme caution while working.

CAUTION
Indicates a potentially hazardous situation which can result in minor or moderate injury or damage to property if the specified actions are not taken.

NOTE
A potentially harmful situation can occur and, if not avoided, can lead to property damage.

1.2 Staff qualifications

The device may only be transported, unpacked, installed, operated, maintained and otherwise used by suitably qualified, trained and authorized technical staff.
Only authorized specialists are permitted to install the device, to carry out a test run and to perform work on the electrical installation.

1.3 Basic safety rules

The safety hazards associated with the device must be assessed again following installation in the final product.
The locally applicable industrial safety regulations are always to be observed when working on the device.
Keep the workplace clean and tidy. Untidiness in the work area increases the risk of accidents.
Note the following when working on the device:

⇒ Do not perform any modifications, additions or conversions on the device without the approval of ebm-papst.



WARNING
To reduce the risk of fire, electric shock or injury to people, do not use any replacement or add-on parts that have not been approved by ebm-papst (e.g. parts manufactured with a 3D printer).

Translation of the original operating instructions

1.4 Voltage

⇒ Check the device's electrical equipment at regular intervals; see Chapter 5.2 Safety inspection.

⇒ Replace loose connections and defective cables immediately.



DANGER
Electrically charged device
Risk of electric shock

→ When working on an electrically charged device, stand on a rubber mat.



WARNING
Live terminals and connections even with device switched off
Electric shock

→ Wait five minutes after disconnecting the voltage at all poles before opening the device.

CAUTION
In the event of a fault, the rotor and the impeller will be energized
The rotor and the impeller have basic insulation.

→ Do not touch the rotor and impeller once installed.

CAUTION
The motor restarts automatically when operating voltage is applied, e.g. after a power failure.
Risk of injury

→ Keep out of the device's danger zone.

→ When working on the device, switch off the line voltage and ensure that it cannot be switched back on.

→ Wait until the device comes to a stop.

1.5 Safety and protective features



DANGER
Guard missing and guard not functioning
Without a guard, hands may become caught up in the device during operation for example, resulting in serious injury. Loose parts or items of clothing could be drawn in.

→ The device is a built-in component. As the owner, you are responsible for ensuring that the device is adequately safeguarded.# Operate the device only with a fixed protective device and guard grill.

→ Stop the device immediately if a protective device is found to be missing or ineffective.

1.6 Mechanical movement



DANGER
Rotating device
Risk of injury to body parts coming into contact with the rotor or the impeller.

→ Secure the device against accidental contact.

→ Before working on the system/machine, wait until all parts have come to a standstill.

WARNING
Rotating device
Long hair and dangling items of clothing, jewelry and the like can become entangled and be pulled into the device. Injuries can result.

→ Do not wear any loose-fitting or dangling clothing or jewelry while working on rotating parts.

→ Protect long hair with a cap.

1.7 Emissions

WARNING
Depending on the installation and operating conditions, the sound pressure level may exceed 70 dB(A).
Risk of noise-induced hearing loss

→ Take appropriate technical safety measures.

→ Protect operating personnel with appropriate safety equipment such as hearing protection.

→ Also observe the requirements of local agencies.

1.8 Hot surface



CAUTION
High temperature on motor housing
Risk of burns

→ Ensure sufficient protection against accidental contact.

1.9 Transport



NOTE
Transporting the device

→ Transport the device in its original packaging only.

1.10 Storage

⇒ Store the device, partially or fully assembled, in a dry place, protected against the weather and free from vibration, in the original packaging in a clean environment.

⇒ Protect the device against environmental effects and dirt until final installation.

⇒ We recommend storing the device for no longer than one year in order to guarantee trouble-free operation and the longest possible service life.

⇒ Even devices explicitly intended for outdoor use are to be stored as described prior to commissioning.

⇒ Maintain the storage temperature, see Chapter 3.5 Transport and storage conditions.

Translation of the original operating instructions

2. INTENDED USE

The device is exclusively designed as a built-in device for conveying air according to its technical data.
Any other usage above and beyond this does not conform with the intended purpose and constitutes misuse of the device.
Customer equipment must be capable of withstanding the mechanical and thermal stresses that can arise from this product. This applies for the entire service life of the equipment in which this product is installed.

Intended use also includes

- Conveying air at an ambient air pressure between 800 mbar and 1050 mbar.
- Using the device within the permitted ambient temperature range; see Chapter 3.5 Transport and storage conditions and Chapter 3.2 Nominal data.
- Operating the device with all protective devices.
- Following the operating instructions.

Improper use

In particular, operating the device in the following ways is prohibited and could be hazardous:

- Operating the device in an unbalanced state, e.g. due to dirt deposits or ice formation.
- Resonant operation, operation with severe vibration. This also includes vibration transmitted to the fan from the customer installation.
- Operation in medical equipment with a life-sustaining or life-support function.
- Conveying solids in the flow medium.
- Painting the device
- Connections (e.g. screws) coming loose during operation.
- Conveying air that contains abrasive particles.
- Conveying highly corrosive air, e.g. salt spray. Exception: devices designed for salt spray and correspondingly protected.
- Conveying air with high dust content, e.g. suctioning off sawdust.
- Operating the device close to flammable materials or components.
- Operating the device in an explosive atmosphere.
- Using the device as a safety component or to perform safety-related functions.
- Operation with completely or partially disassembled or manipulated protective devices.
- In addition, all applications not listed among the intended uses.

Translation of the original operating instructions

ebm-papst Mulfingen GmbH & Co. KGaA & Co. KG · Bachmühle 2 · D-74673 Mulfingen · Phone +49 (0) 7938 81-0 · info1@de.ebmpapst.com · www.ebmpapst.com

3. TECHNICAL DATA

3.1 Product drawing

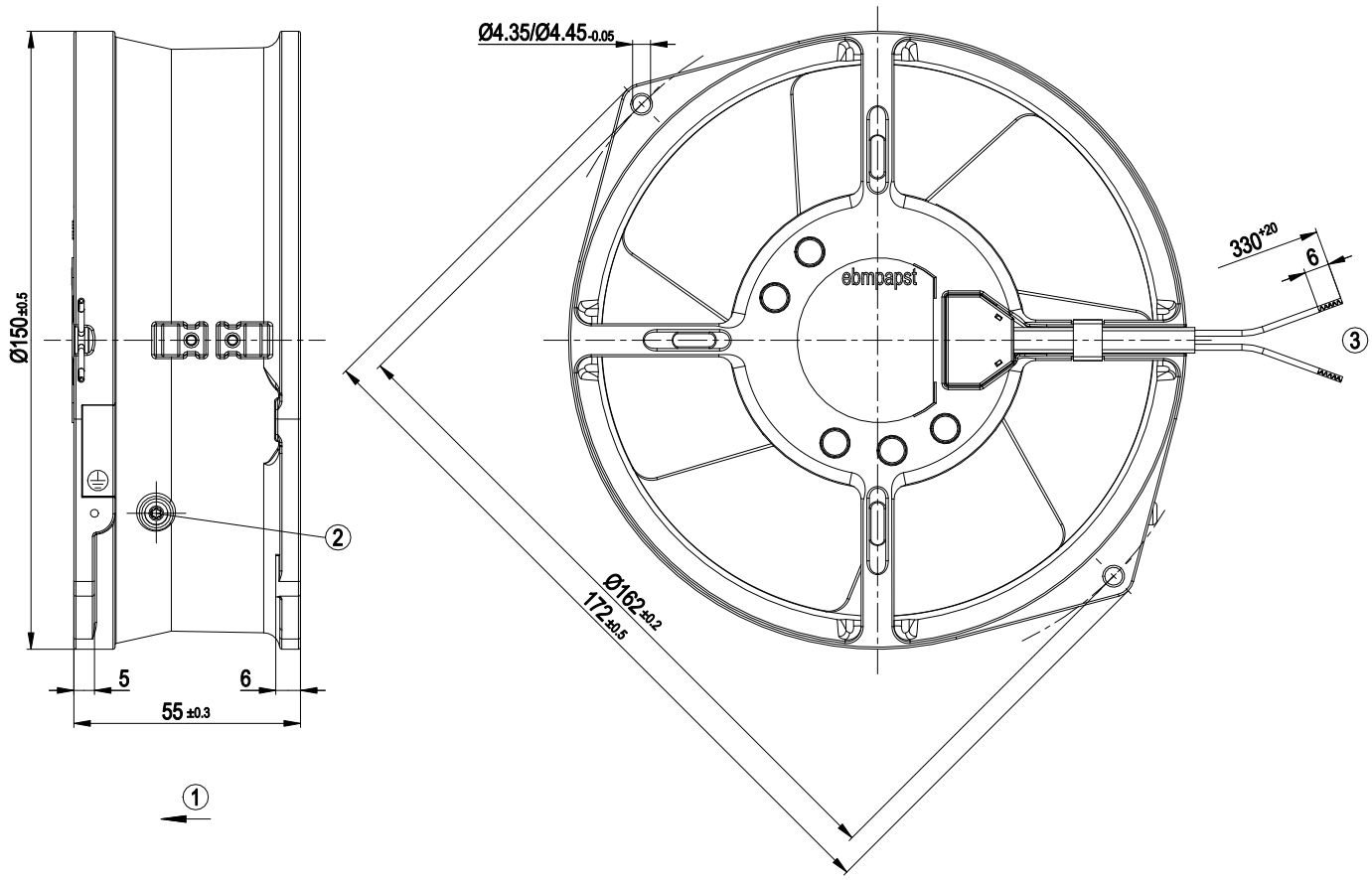

All dimensions in mm.

1	Direction of air flow "V"
2	M4 screw for fastening ground connector
3	Cable AWG20, 2x crimped splices

Translation of the original operating instructions

3.2 Nominal data

Motor	M2S052-CA

Phase	1~	1~
Nominal voltage / VAC	230	230
Frequency / Hz	50	60
Method of obtaining data	fa	fa
Valid for approval/ standard	CE	CE
Speed (rpm) / min^{-1}	2800	3250
Power consumption / W	45	39
Current draw / A	0.31	0.25
Max. back pressure / Pa	80	120
Min. ambient temperature / °C	-25	-25
Max. ambient temperature / °C	50	70
Starting current / A	0.45	0.40

ml = Max. load · me = Max. efficiency · fa = Free air
cs = Customer specification · ce = Customer equipment

Subject to change

3.3 Technical description

Weight	1.04 kg
Size	130 mm
Motor size	52
Rotor surface	Rotor open, painted black
Blade material	Sheet steel, painted black
Fan housing material	Die-cast aluminum, painted black
Number of blades	7
Airflow direction	V
Direction of rotation	Counterclockwise, viewed toward rotor
Degree of protection	IP20
Insulation class	"B"
Moisture (F) / Environmental (H) protection class	H0+ = Dry - temperature-controlled indoor spaces + additional load
Installation position	Any
Condensation drainage holes	None, open rotor
Mode	S1
Motor bearing	Ball bearing
Touch current according to IEC 60990 (measuring circuit Fig. 4, TN system)	< 0.75 mA
Motor protection	Thermal switch auto reset, internally connected
Protection class assignment	I; If a protective earth is connected. The built-in component has several local protection class assignments. The final protection class is determined by the intended installation.
Conformity with standards	EN 60335-1; UKCA; CE
Comment on CE	Ecodesign Directive 2009/125/EC + Fan Directive (EC) No. 327/2011 does not apply, as power consumption <125W.
Approval	CSA C22.2 No. 113; CCC; EAC; VDE; UL 507

⇒ Use the device in accordance with its degree of protection.

Information on surface quality

The surfaces of the products conform to the generally applicable industrial standard. The surface quality may change during the production period. This has no effect on strength, dimensional stability and dimensional accuracy.
The color pigments in the paints used perceptibly react to UV light over the course of time. The product is to be protected against UV radiation to prevent the formation of patches and fading. Changes in color are not a reason for complaint and are not covered by the warranty. UV radiation in the frequency range and the intensity of natural solar radiation has no effect on the technical properties of the products.

3.4 Mounting data

Further mounting data can be taken from the product drawing or Chapter 4.1 Mechanical connection as required.

Strength class of screws	8.8

For screw clearance, see Chapter 3.1 Product drawing

⇒ Secure the screws against unintentional loosening (e.g. use self-locking screws).

3.5 Transport and storage conditions

Max. permitted ambient temp. for motor (transport/ storage)	+ 80 °C
Min. permitted ambient temp. for motor (transport/ storage)	- 40 °C

Translation of the original operating instructions

4. CONNECTION AND STARTUP

4.1 Mechanical connection



CAUTION
Cutting and crushing hazard when removing device from packaging
Blades can bend



→ Carefully remove the device from its packaging, by the fan housing. Strictly avoid shocks.

→ Wear safety shoes and cut-resistant safety gloves.

⇒ Check the device for transport damage. Damaged devices are not to be installed.

⇒ Install the undamaged device in accordance with your application.



CAUTION
Possible damage to the device
If the device slips during installation, serious damage can result.

→ Ensure that the device is securely positioned at its place of installation until all fastening screws have been tightened.

- The fan must not be strained on fastening.

4.2 Electrical connection



DANGER
Voltage on the device
Electric shock

→ Always connect a protective earth first.

→ Check the protective earth.



DANGER
Faulty insulation
Risk of fatal injury from electric shock

→ Use only cables that meet the specified installation regulations for voltage, current, insulation material, capacity, etc.

→ Route cables so that they cannot be touched by any rotating parts.

NOTE
Water ingress into wires or cables
Water ingress at the customer end of the cable can damage the device.

→ Make sure the end of the cable is connected in a dry environment.



Only connect the device to circuits that can be switched off with an all-pole disconnection switch.

4.2.1 Requirements

⇒ Check whether the information on the nameplate matches the connection data.

⇒ Before connecting the device, make sure the power supply matches the device voltage.

⇒ Only use cables designed for the current level indicated on the nameplate.
For determining the cross-section, note the sizing criteria according to EN 61800-5-1. The protective earth must have a cross-section equal to or greater than that of the phase conductor.
We recommend the use of 105 °C cables. Ensure that the minimum cable cross-section is at least
AWG 26 / 0.13 mm².

Protective earth contact resistance according to EN 60335

Compliance with the resistance specifications according to EN 60335 for the protective earth connection circuit must be verified in the end application. Depending on the installation situation, it may be necessary to connect an additional protective earth conductor by way of the extra protective earth terminal provided on the device.

4.2.2 Voltage control



NOTE
Current overshoots may occur if speed control is implemented by transformers or electronic voltage regulators (e.g. phase control). Depending on the type of installation of the device, noise and vibration may also occur in the case of phase control. Vibration can lead to bearing damage and thus premature failure.

Heating-up of the motor when using voltage control must be checked by the customer following installation in the end device.

4.2.3 Variable frequency drive

Please use a variable frequency drive only after consultation with ebm-papst.



For operation with variable frequency drives, install sinusoidal filters that work on all poles (phase-phase and phase-ground) between the drive and the motor.
During operation with variable frequency drives, an all-pole sine filter protects the motor against high-voltage transients that can destroy the coil insulation system, and against harmful bearing currents.

Heating-up of the motor when using a variable frequency drive must be checked by the customer following installation in the end device.

4.3 Connecting the cables

The device has external leads.

⇒ First connect the "PE" (protective earth).

- Connect the cables according to your application. When doing so, observe Chapter 4.4 Connection diagram.

Translation of the original operating instructions

4.4 Connection diagram

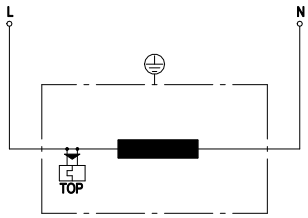

L	= black
N	= black
TOP	= thermal overload protector

Translation of the original operating instructions

4.5 Checking connections

⇒ Ensure isolation from supply (all phases).

⇒ Make sure a restart is impossible

⇒ Check the cables for proper fit.

4.6 Switching on the device

The device may only be switched on if it has been installed properly and in accordance with its intended use, including the required safety mechanisms and professional electrical hookup. This also applies for devices which have already been equipped with plugs and terminals or similar connectors by the customer.



WARNING
Hot motor housing
Risk of fire

→ Ensure that no combustible or flammable materials are located close to the fan.

⇒ Before switching on, check the device for visible external damage and make sure the protective devices are functional.

⇒ Check the fan's air flow paths for foreign matter and remove any foreign matter found.

⇒ Apply the nominal supply voltage.



NOTE
Damage to the device from vibration
Bearing damage, shorter service life

→ Low-vibration operation of the fan must be ensured over the entire speed control range.

→ Severe vibration can arise for instance from inexpert handling, transportation damage and resultant imbalance or be caused by component or structural resonance.

→ Speed ranges with excessively high vibration levels and possibly resonant frequencies must be determined in the course of fan commissioning.

→ Either run through the resonant range as quickly as possible with speed control or find another remedy.

→ Operation with excessively high vibration levels can lead to premature failure.

4.7 Switching off the device

⇒ Disconnect the device from the power supply at the supply line's main switch.

⇒ When disconnecting, be sure to disconnect the ground connection last.

5. MAINTENANCE, MALFUNCTIONS, POSSIBLE CAUSES AND REMEDIES

Do not perform any repairs on your device. Send the device to ebm-papst for repair or replacement.



WARNING
Live terminals and connections even with device switched off
Electric shock

→ Wait five minutes after disconnecting the voltage at all poles before opening the device.

CAUTION
The motor restarts automatically when operating voltage is applied, e.g. after a power failure.
Risk of injury

→ Keep out of the device's danger zone.

→ When working on the device, switch off the line voltage and ensure that it cannot be switched back on.

→ Wait until the device comes to a stop.



If the device is out of use for some time, e.g. when in storage, we recommend switching it on for at least two hours to allow any condensation to evaporate and to move the bearings.

Malfunction/fault	Possible cause	Possible remedy
Impeller not running smoothly	Imbalance in rotating parts	Clean the device; replace it if imbalance persists after cleaning. Make sure no weight clips are removed during cleaning.
Motor not turning	Mechanical blockage	Switch off, isolate from supply and remove mechanical blockage.
	Line voltage faulty	Check line voltage, restore power supply.
	Faulty connection	Isolate from supply, correct connection; see connection diagram.
	Thermal overload protector activated	Allow motor to cool off, locate and rectify cause of error, release restart lockout if necessary
	Impermissible point of operation	Check point of operation
Motor overtemperature	Ambient temperature too high	Reduce ambient temperature if possible
	Deficient cooling	Improve cooling



In the event of further malfunctions, contact ebm-papst.

Translation of the original operating instructions

5.1 Cleaning

To ensure a long service life, check the fans regularly for proper operation and soiling. The frequency of checking is to be adapted accordingly depending on the degree of soiling.

DANGER
Risk of injury from rotating fan.

→ Only clean when not in motion. Interrupt the power supply, secure against renewed switch-on. Secure against start-up, prevent air flow.

⇒ Dirt deposits on the motor housing can cause overheating of the motor.

⇒ Soiling of the impeller can cause vibration that will shorten the service life of the fan.

⇒ Severe vibration can destroy the fan.

⇒ In such cases, switch off the fan immediately and clean it.

⇒ The preferred method of cleaning is dry cleaning, e.g. using compressed air.

⇒ Do not use aggressive cleaning agents!

NOTE
Damage to the device during cleaning
Malfunction possible

→ Do not clean the device using a water jet or high-pressure cleaner.

→ Do not use any acid, alkali or solvent-basedcleaning agents.

→ Do not use any pointed or sharp-edged objects for cleaning

⇒ Completely remove any cleaning agents used.

⇒ If severe corrosion is visible on load-bearing or rotating parts, switch off the device immediately and replace it.

⇒ Repair of load-bearing or rotating parts is not permitted!

⇒ Operate the fan for 2 hours at maximum speed so that any water that has ingressed can evaporate.

⇒ If cleaning does not eliminate vibrations, the fan may need to be rebalanced. To have it rebalanced, contact ebm-papst.

⇒ The fan is equipped with maintenance-free ball bearings. The lifetime lubrication of the ball bearings is designed for a service life of 40,000 hours.

⇒ Adapt the maintenance intervals to the actual level of dust exposure.

5.2 Safety inspection

What to check	How to check	How often	What action?
Contact protection cover for intactness or damage	Visual inspection	At least every 6 months	Repair or replacement of device
Device for damage to blades and housing	Visual inspection	At least every 6 months	Replacement of device
Fastening the cables	Visual inspection	At least every 6 months	Fasten
Insulation of cables for damage	Visual inspection	At least every 6 months	Replace cables
Welds for crack formation	Visual inspection	At least every 6 months	Replace device
Abnormal bearing noise	acoustic	At least every 6 months	Replace device

5.3 Disposal

For ebm-papst, environmental protection and resource preservation are top priority corporate goals.
ebm-papst operates an environmental management system which is certified in accordance with ISO 14001 and rigorously implemented around the world on the basis of German standards.
Right from the development stage, ecological design, technical safety and health protection are fixed criteria.
The following section contains recommendations for ecological disposal of the product and its components.

5.3.1 Country-specific legal requirements

NOTE
Country-specific legal requirements
Always observe the applicable country-specific legal regulations with regard to the disposal of products or waste occurring in the various phases of the life cycle. The corresponding disposal standards are also to be heeded.

5.3.2 Disassembly

Disassembly of the product must be performed or supervised by qualified personnel with the appropriate technical knowledge.
The product is to be disassembled into suitable components for disposal employing standard procedures for motors.

WARNING
Heavy parts of the product may drop off. Some of the product components are heavy. These components could drop off during disassembly.
This can result in fatal or serious injury and material damage.

→ Secure components before unfastening to stop them falling.

5.3.3 Component disposal

The products are mostly made of steel, copper, aluminum and plastic. Metallic materials are generally considered to be fully recyclable.
Separate the components for recycling into the following categories:

- Steel and iron
- Aluminum
- Non-ferrous metal, e.g. motor windings
- Plastics, particularly with brominated flame retardants, in accordance with marking
- Insulating materials
- Cables and wires
- Electronic scrap, e.g. circuit boards

Only ferrite magnets and not rare earth magnets are used in external rotor motors from ebm-papst Mulfingen GmbH & Co. KG.

⇒ Ferrite magnets can be disposed of in the same way as normal iron and steel.

Electrical insulating materials on the product, in cables and wires are made of similar materials and are therefore to be treated in the same manner.
The materials concerned are as follows:

- Miscellaneous insulators used in the terminal box
- Power cables
- Cables for internal wiring
- Electrolytic capacitors

Translation of the original operating instructions

Dispose of electronic components employing the proper procedures for electronic scrap.



→ Please contact ebm-papst for any other questions on disposal.

Translation of the original operating instructions