KSK-1C90U Series Reed Switches

- **Features: SPDT Changeover, Miniature**
- **Applications: Door Detector, Tampering Switch, Counter & Others**
- **Markets: Automotive, Test & Measurement, Safety & Others**



Part Description: KSK-1C90U-XXXX

Contact Qty	Contact Form	Switch Model	Pull-In Excitation (AT Range)
1	C	90U	15 - 45

Customer Options	Switch Model	Unit
Contact Data	90U	
Rated Power (max.) Any DC combination of V&A not to exceed their individual max.'s	10	W
Switching Voltage (max.) DC or peak AC	175	V
Switching Current (max.) DC or peak AC	0.5	A
Carry Current (max.) DC or peak AC	1.0	A
Contact Resistance (max.) @ 0.5V & 50mA	150	mOhm
Breakdown Voltage (min.) According to EN60255-5	0.2	kVDC
Operating Time (max.) Incl. Bounce; Measured with w/ Nominal Voltage	0.7	ms
Release Time (max.) Measured with no Coil Excitation	1.5	ms
Test Coil	KMS01	
Insulation Resistance (typ.) Rh<45%, 100V Test Voltage	10^9	Ohm
Capacitance (typ.) @ 10kHz across open Switch	1.0	pF

USA: +1 866.782.6339 | salesusa@standexmeder.com EMEA: +49 7731/8399-0 | info@standexmeder.com APAC: +86 21/37606000 | salesasia@standexmeder.com

KSK-1C90U Series Reed Switches

KSK-1C90U Reed Switch

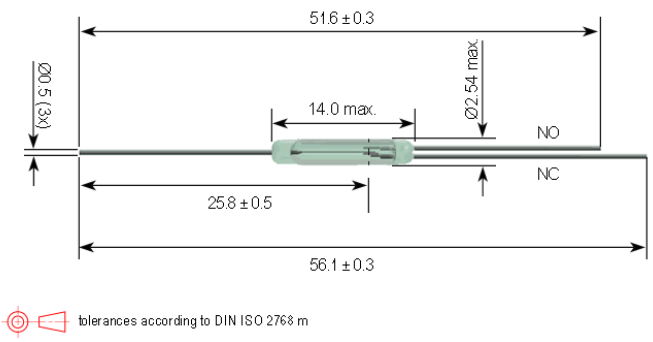

Glossary Contact Form

Form A	NO = Normally Open Contacts SPST = Single Pole Single Throw	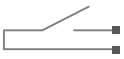
Form B	NC = Normally Closed Contacts SPST = Single Pole Single Throw	
Form C	Changeover SPDT = Single Pole Double Throw	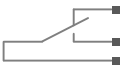
Form E	Bistable Contact Latching Type remains unchanged until a magnetic field of opposite polarity is present	

Handling & Assembly Instructions

- Use proper lead clamping or heat sinking techniques to prevent mechanical and/or heat stress during, soldering, and welding
- Mechanical shock as the result of dropping the reed sensor typically from a distance of greater than 12" may change it's magnetic sensitivity and/or destroy the sensor
- Any form of modification to the switch leads will alter it's magnetic sensitivity

Dimensions (mm)

Overall Length Max.	56.1
Glass Length Max.	14.0
Glass Dia. Max.	2.54
Lead Dia. Max.	0.5

Environmental Data		Unit
Shock Resistance (max.) 1/2 sine wave duration 11ms	50	g
Vibration Resistance (max.)	20	g
Operating Temperature	-40 to 130	°C
Storage Temperature	-55 to 130	°C
Soldering Temperature (max.) 5 sec. max.	260	°C

Life Test Data

*Load increase reduces life expectancy of Reed Switches

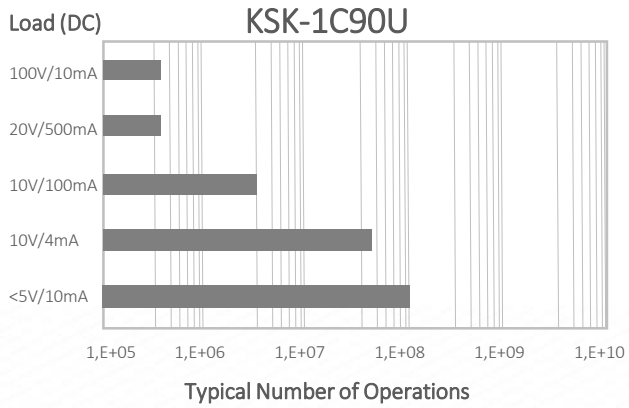

Please note: All technical specifications on this series datasheet refer to the standard product range. Modifications in the sense of technical progress are reserved. For general information only. For more specific information, please consult the product datasheet, available upon request.

This series datasheet could contain technical inaccuracies or typographical errors. Changes are periodically made to the information herein. These change will be incorporated in future revisions.

For deviating values, most current specifications and products please contact your nearest sales office.

USA: +1 866.782.6339 | salesusa@standexmeder.com EMEA: +49 7731/8399-0 | info@standexmeder.com APAC: +86 21/37606000 | salesasia@standexmeder.com